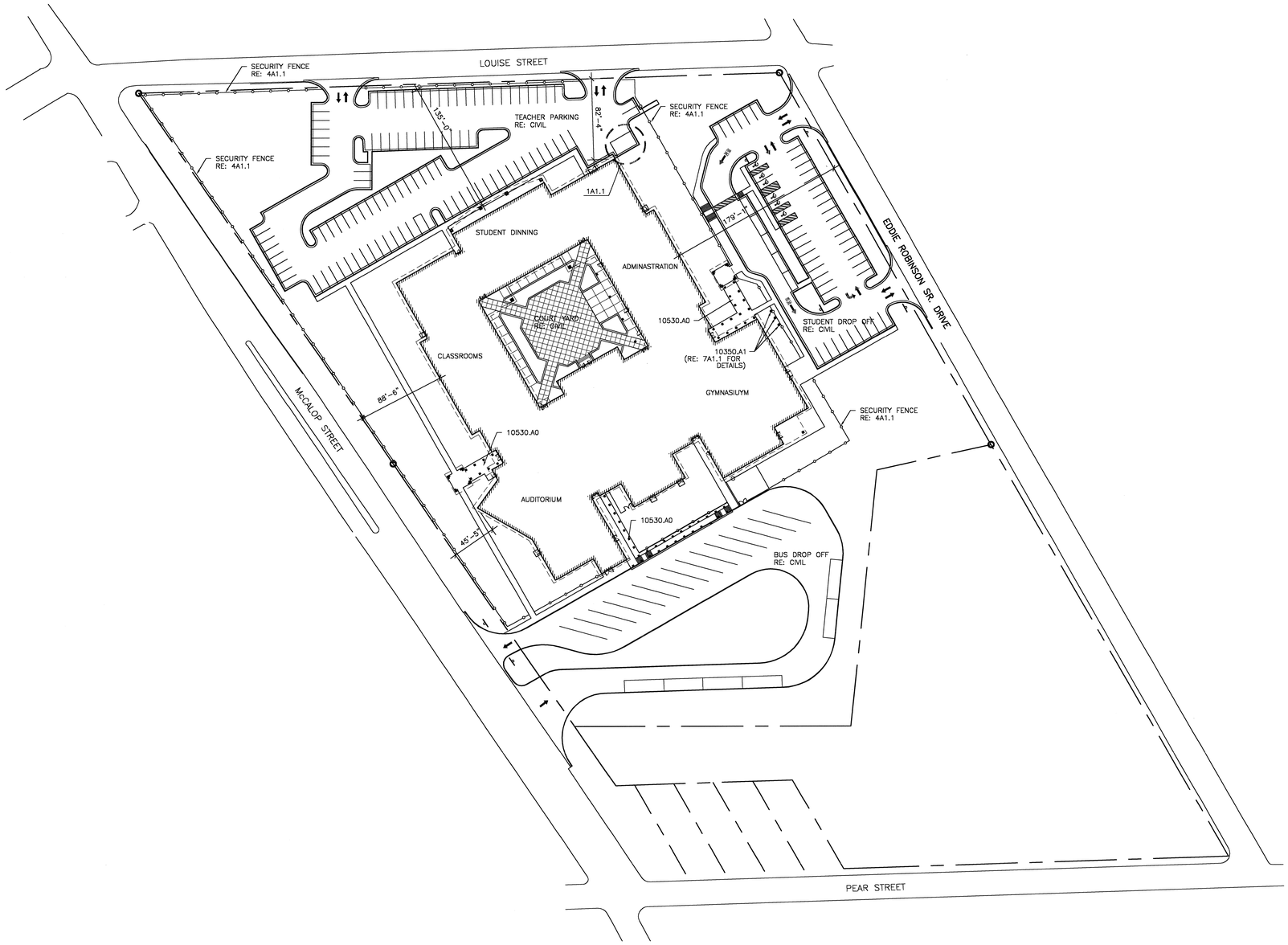

N

PROJECT

1 SITE PLAN

SCALE: 1" = 50'-0"

0 25' 50' 100'

NOTES: 1. REFER TO CIVIL DRAWINGS FOR EXACT LOCATIONS OF PROPERTY LINES AND LOCATION OF THE BUILDING, PARKING LOTS AND SIDEWALKS.

2. PROVIDE GATE AT ALL SIDEWALK AND DRIVE LOCATIONS THAT THE SECURITY FENCE IS LOCATED.

MATERIAL KEYNOTES

10350.A1	FLAG POLES
10530.A0	WALKWAY COVERS – DRAINABLE

KEY PLAN

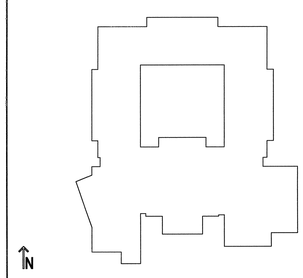

USE OF ARCHITECT'S DRAWINGS, SPECIFICATIONS AND OTHER DOCUMENTS

THE DRAWINGS, SPECIFICATIONS AND OTHER DOCUMENTS PREPARED BY THE ARCHITECT FOR THIS PROJECT ARE INSTRUMENTS OF THE ARCHITECT'S SERVICE FOR USE SOLELY WITH RESPECT TO THIS PROJECT AND, UNLESS OTHERWISE PROVIDED, THE ARCHITECT SHALL BE DEEMED THE AUTHOR OF THESE DOCUMENTS AND SHALL RETAIN ALL COMMON LAW, STATUTORY AND OTHER RESERVED RIGHTS, INCLUDING REPRODUCIBLE COPIES, OF THE ARCHITECT'S DRAWINGS, SPECIFICATIONS AND OTHER DOCUMENTS FOR INFORMATION AND REFERENCE IN CONNECTION WITH THE OWNER'S USE AND OCCUPANCY OF THE PROJECT. THE ARCHITECT'S DRAWINGS, SPECIFICATIONS OR OTHER DOCUMENTS SHALL NOT BE USED BY THE OWNER OR OTHERS ON OTHER PROJECTS, FOR ADDITIONS TO THIS PROJECT OR FOR COMPLETION OF THIS PROJECT BY OTHERS, UNLESS THE ARCHITECT IS ADJUDGED TO BE IN DEFAULT UNDER THIS AGREEMENT, EXCEPT BY AGREEMENT IN WRITING AND WITH APPROPRIATE COMPENSATION TO THE ARCHITECT.

NO.	DATE	REVISION/SUBMISSION
1	11/12/04	FIRE MARSHAL AND C.P. REVISIONS

McKINLEY MIDDLE MAGNET SCHOOL

1550 EDDIE ROBINSON SR. DRIVE
BATON ROUGE, LOUISIANA 70802

Robert M. Coleman & Partners Architects A.I.A.
3377 North Boulevard
Baton Rouge, Louisiana
70808
U.S.A.
tel 225.387.4414
fax 225.387.4693

OVERALL SITE PLAN

PROJECT NO. 0304B	SHEET NO.. A1.0
DRAWN BY CS	
CHECKED BY JS	
DATE October 15, 2004	____ OF ____

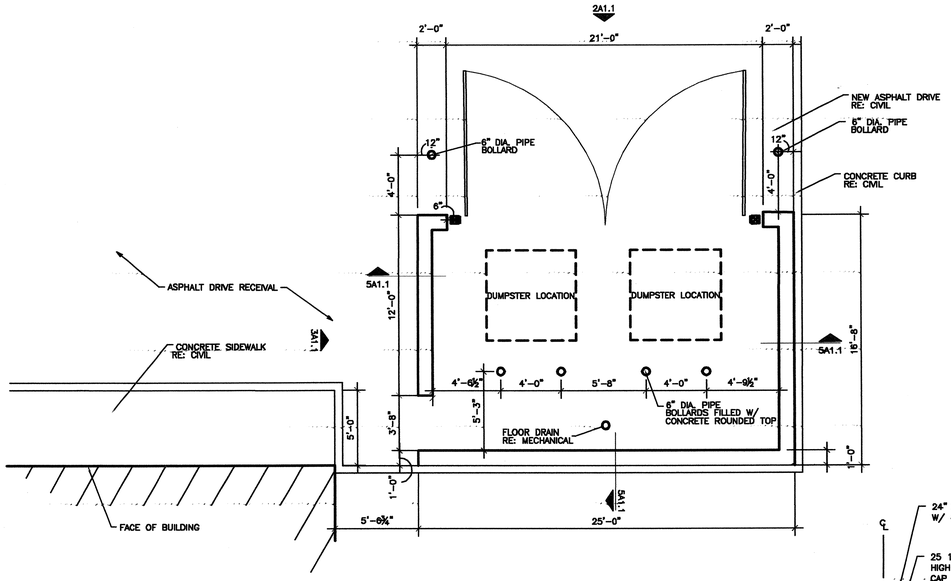

N
PROJECT

1 TRASH ENCLOSURE PLAN
SCALE: 1/4" = 1'-0"

NOTES: REFER TO CIVIL DRAWINGS FOR EXACT LOCATIONS OF PROPERTY LINES AND LOCATION OF THE BUILDING, PARKING LOTS AND SIDEWALKS.

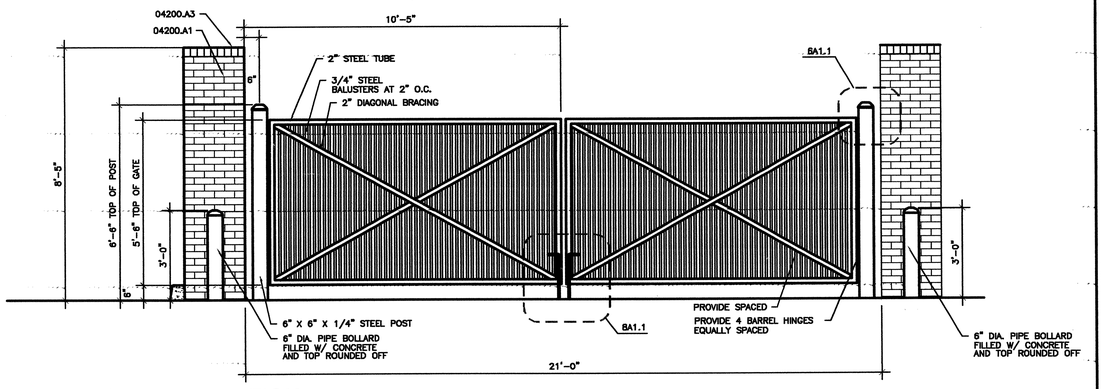

2 GATE ELEVATION
SCALE: 1/2" = 1'-0"

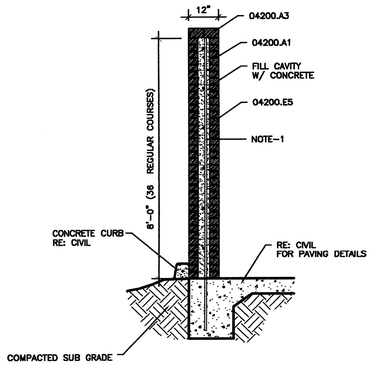

5 TRASH ENCLOSURE SECTION
SCALE: 1/2" = 1'-0"

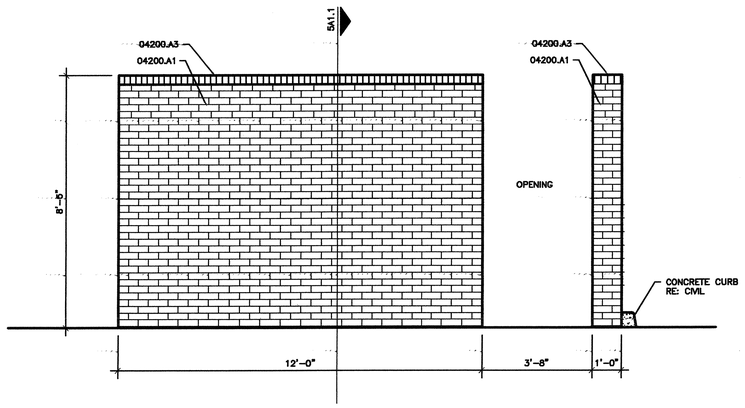

3 GATE ELEVATION
SCALE: 1/2" = 1'-0"

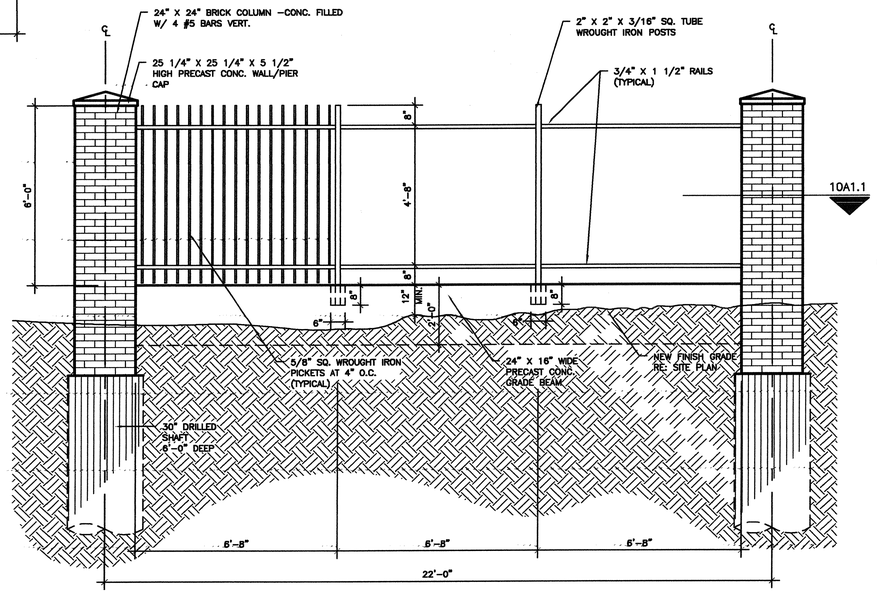

4 PARTIAL ELEVATION AT FENCE
SCALE: 1/2" = 1'-0"

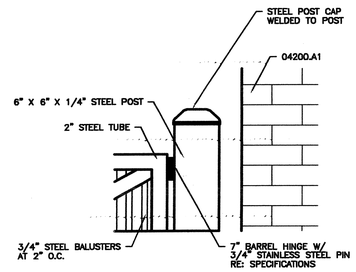

6 CANE BOLT DETAIL
SCALE: 1-1/2" = 1'-0"

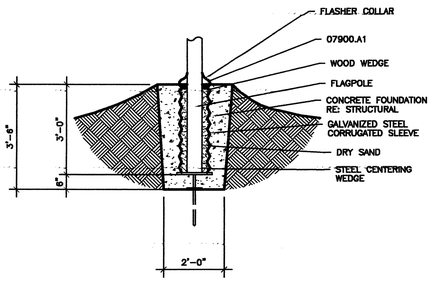

7 FLAGPOLE FOUNDATION
SCALE: 1/2" = 1'-0"

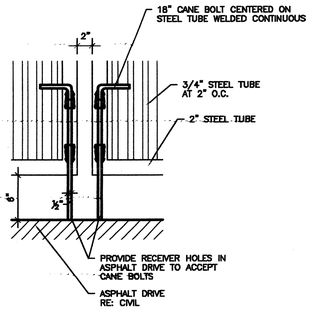

8 CANE BOLT DETAIL
SCALE: 1-1/2" = 1'-0"

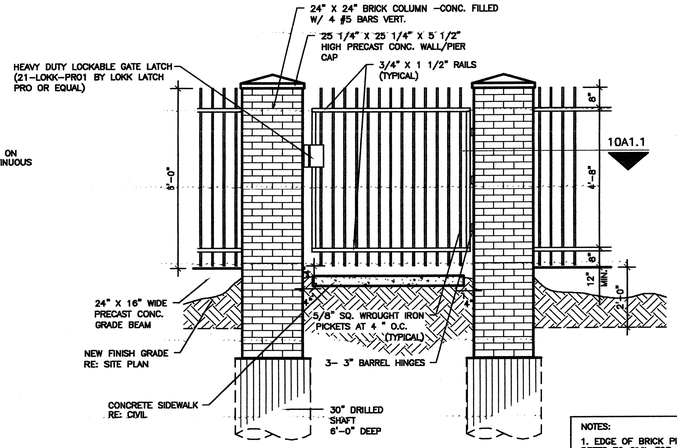

9 TYPICAL ENTRANCE GATE
SCALE: 1/2" = 1'-0"

NOTES:
1. EDGE OF BRICK PIER TO BE LOCATED 4" OFF THE EDGE OF SIDEWALK. REFER TO CIVIL FOR SIDEWALK WIDTHS.
2. ROUGH OPENING OF GATE SHOULD BE 8" WIDER THEN THE SIDEWALK THAT IT CROSSES. FIELD VERIFY ALL DIMENSIONS PRIOR TO FABRICATION OF GATES.

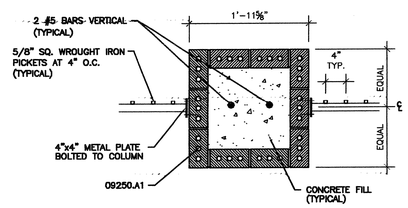

9 MASONRY PIER DETAIL
SCALE: 1/2" = 1'-0"

MATERIAL KEYNOTES

04200.A1	4" VENEER FACE BRICK RE: ELEVATIONS AND DETAILS FOR LOCATIONS OF ACCENT COLORS OF BRICK
04200.A3	ROWLOCK COURSE
04200.E5	LADDER TYPE HORIZONTAL REINFORCING @ 16" o.c. VERTICAL TYPICAL
07900.A1	BACKER ROD AND SEALANT
NOTE-1	RE: STRUCTURAL

KEY PLAN

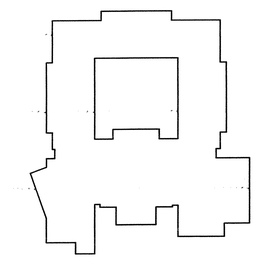

USE OF ARCHITECT'S DRAWINGS, SPECIFICATIONS AND OTHER DOCUMENTS

THE DRAWINGS, SPECIFICATIONS AND OTHER DOCUMENTS PREPARED BY THE ARCHITECT FOR THIS PROJECT ARE INSTRUMENTS OF THE ARCHITECT'S SERVICE FOR USE SOLELY WITH RESPECT TO THIS PROJECT AND, UNLESS OTHERWISE PROVIDED, THE ARCHITECT SHALL BE DEEMED THE AUTHOR OF THESE DOCUMENTS AND SHALL RETAIN ALL COMMON LAW, STATUTORY AND OTHER RESERVED RIGHTS, INCLUDING REPRODUCIBLE COPIES, OF THE ARCHITECT'S DRAWINGS, SPECIFICATIONS AND OTHER DOCUMENTS FOR INFORMATION AND REFERENCE IN CONNECTION WITH THE OWNER'S USE AND OCCUPANCY OF THE PROJECT. THE ARCHITECT'S DRAWINGS, SPECIFICATIONS OR OTHER DOCUMENTS SHALL NOT BE USED BY THE OWNER OR OTHERS ON OTHER PROJECTS, FOR ADDITIONS TO THIS PROJECT OR FOR COMPLETION OF THIS PROJECT BY OTHERS, UNLESS THE ARCHITECT IS ADJUDGED TO BE IN DEFAULT UNDER THIS AGREEMENT, EXCEPT BY AGREEMENT IN WRITING AND WITH APPROPRIATE COMPENSATION TO THE ARCHITECT.

NO.	DATE	REVISION/SUBMISSION
1	11/12/04	FIRE MARSHAL AND C.P. REVISIONS

McKINLEY MIDDLE MAGNET SCHOOL

1550 EDDIE ROBINSON SR. DRIVE
BATON ROUGE, LOUISIANA 70802

Robert M. Coleman Architects & Partners A.I.A.
3377 North Boulevard
Baton Rouge, Louisiana 70808
U.S.A.
tel 225.387.4414
fax 225.387.4665

SITE DETAILS

PROJECT NO. 03048	SHEET NO.. A1.1
DRAWN BY BH, CS	
CHECKED BY JS	
DATE October 15, 2004	OF

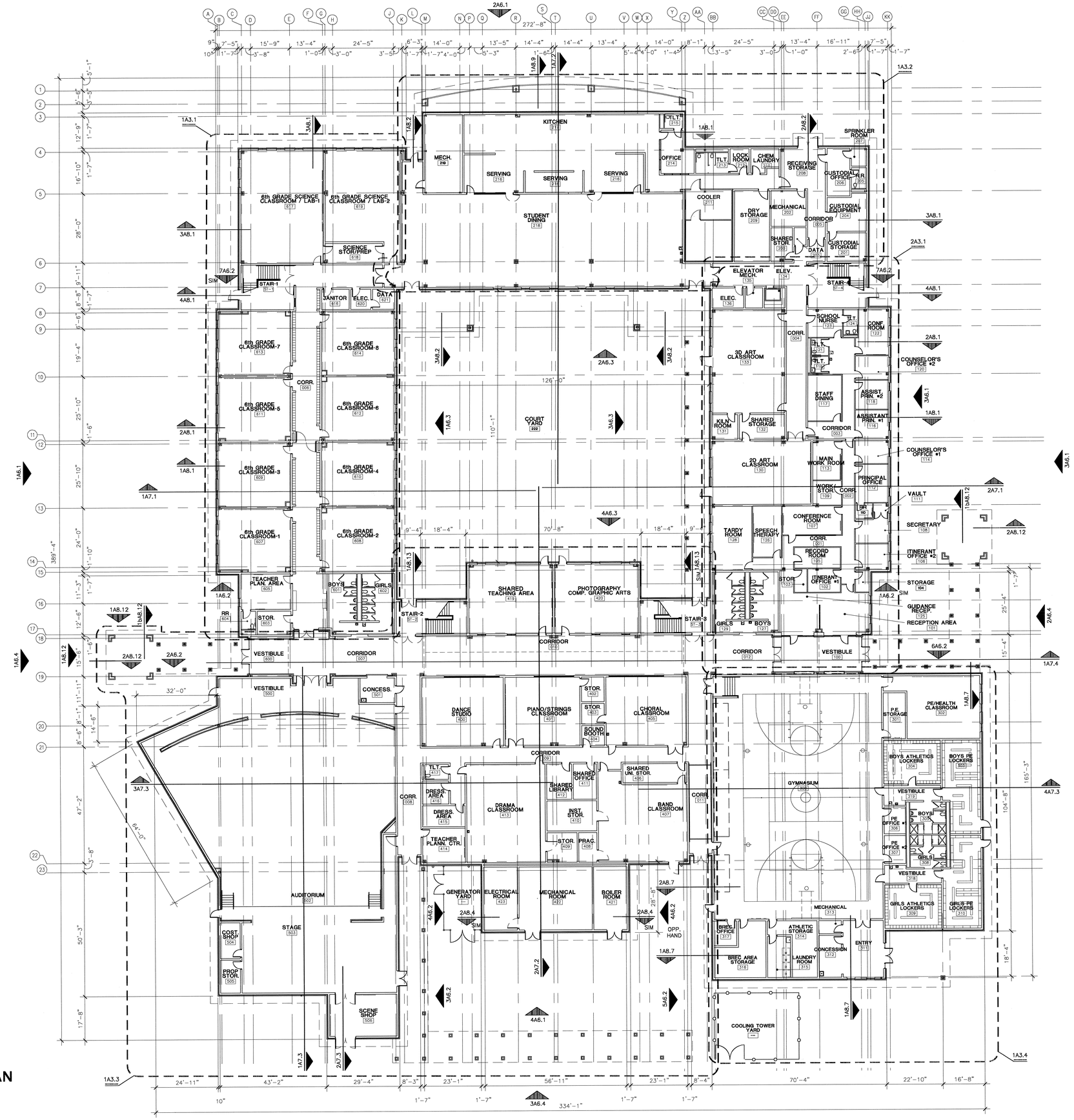

N

PROJECT

1 FIRST FLOOR PLAN
SCALE: 1/16" = 1'-0"

0 8' 16' 32'

MATERIAL KEYNOTES

KEY PLAN

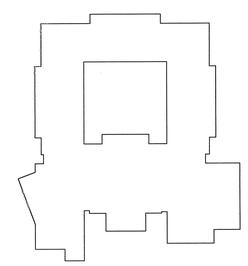

N

USE OF ARCHITECT'S DRAWINGS, SPECIFICATIONS AND OTHER DOCUMENTS

THE DRAWINGS, SPECIFICATIONS AND OTHER DOCUMENTS PREPARED BY THE ARCHITECT FOR THIS PROJECT ARE INSTRUMENTS OF THE ARCHITECT'S SERVICE FOR USE SOLELY WITH RESPECT TO THIS PROJECT AND, UNLESS OTHERWISE PROVIDED, THE ARCHITECT SHALL BE DEEMED THE AUTHOR OF THESE DOCUMENTS AND SHALL RETAIN ALL COMMON LAW, STATUTORY AND OTHER RESERVED RIGHTS, INCLUDING REPRODUCIBLE COPIES. OF THE ARCHITECT'S DRAWINGS, SPECIFICATIONS AND OTHER DOCUMENTS FOR INFORMATION AND REFERENCE IN CONNECTION WITH THE OWNER'S USE AND OCCUPANCY OF THE PROJECT. THE ARCHITECT'S DRAWINGS, SPECIFICATIONS OR OTHER DOCUMENTS SHALL NOT BE USED BY THE OWNER OR OTHERS ON OTHER PROJECTS, FOR ADDITIONS TO THIS PROJECT OR FOR COMPLETION OF THIS PROJECT BY OTHERS, UNLESS THE ARCHITECT IS ADJUDGED TO BE IN DEFAULT UNDER THIS AGREEMENT, EXCEPT BY AGREEMENT IN WRITING AND WITH APPROPRIATE COMPENSATION TO THE ARCHITECT.

NO.	DATE	REVISION/SUBMISSION
1	11/12/04	FIRE MARSHAL AND C.P. REVISIONS

McKINLEY MIDDLE MAGNET SCHOOL

1550 EDDIE ROBINSON SR. DRIVE
BATON ROUGE, LOUISIANA 70802

Robert M. Coleman & Partners Architects A.I.A.
3377 North Boulevard
Baton Rouge, Louisiana 70808
U.S.A.
tel 225.387.4414
fax 225.387.4893

OVERALL FLOOR PLAN FIRST FLOOR

PROJECT NO. 03048	SHEET NO.. A2.1
DRAWN BY CS, BH	
CHECKED BY JS	
DATE October 15, 2004	OF

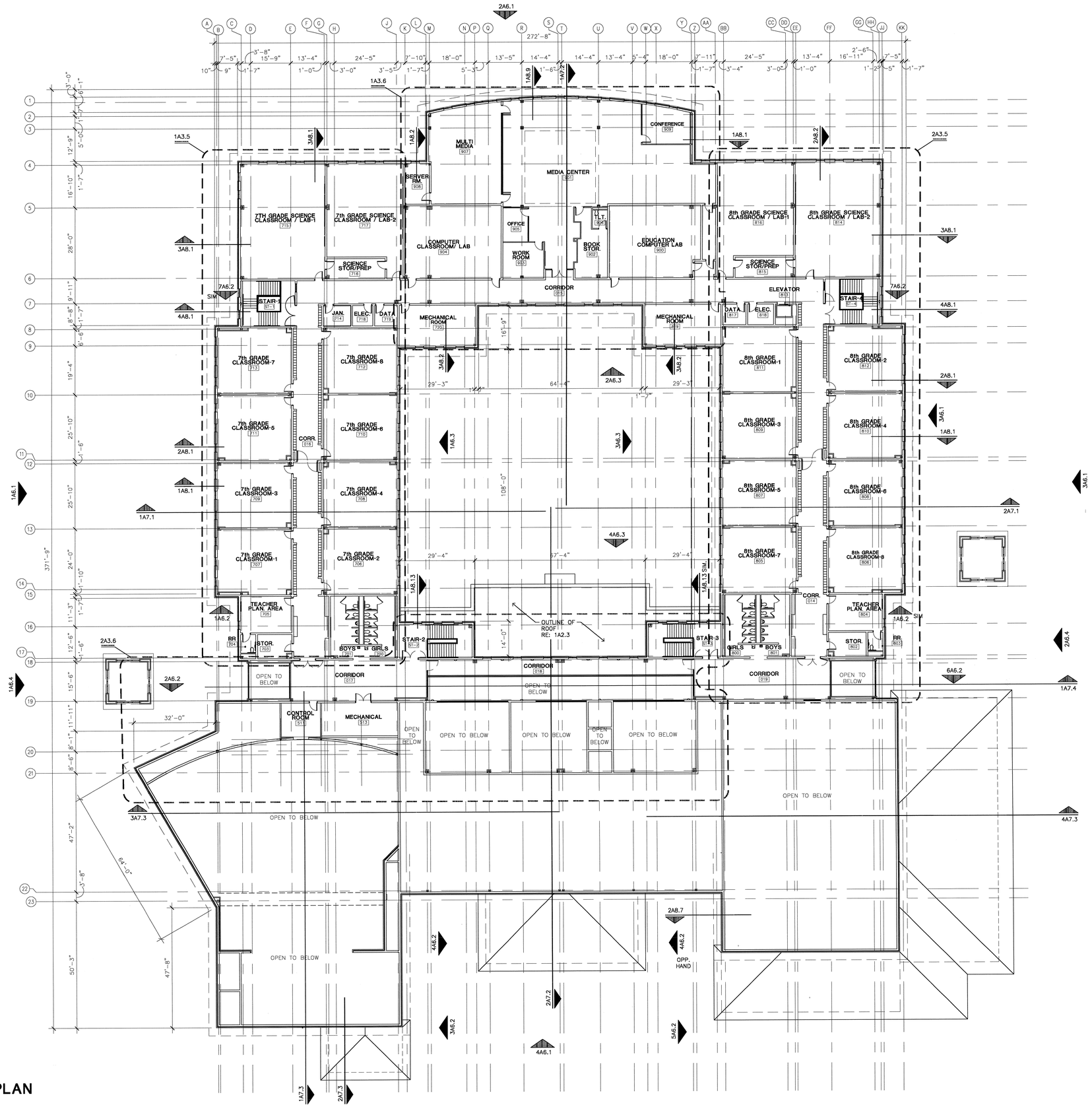

N

PROJECT

1 SECOND FLOOR PLAN

SCALE: 1/16" = 1'-0"

0 8' 16' 32'

MATERIAL KEYNOTES

KEY PLAN

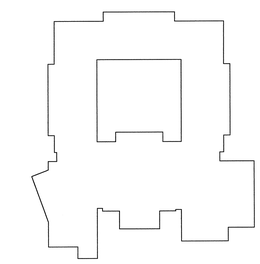

USE OF ARCHITECT'S DRAWINGS, SPECIFICATIONS AND OTHER DOCUMENTS

THE DRAWINGS, SPECIFICATIONS AND OTHER DOCUMENTS PREPARED BY THE ARCHITECT FOR THIS PROJECT ARE INSTRUMENTS OF THE ARCHITECT'S SERVICE FOR USE SOLELY WITH RESPECT TO THIS PROJECT AND, UNLESS OTHERWISE PROVIDED, THE ARCHITECT SHALL BE DEEMED THE AUTHOR OF THESE DOCUMENTS AND SHALL RETAIN ALL COMMON LAW, STATUTORY AND OTHER RESERVED RIGHTS, INCLUDING REPRODUCIBLE COPIES, OF THE ARCHITECT'S DRAWINGS, SPECIFICATIONS AND OTHER DOCUMENTS FOR INFORMATION AND REFERENCE IN CONNECTION WITH THE OWNER'S USE AND OCCUPANCY OF THE PROJECT. THE ARCHITECT'S DRAWINGS, SPECIFICATIONS OR OTHER DOCUMENTS SHALL NOT BE USED BY THE OWNER OR OTHERS ON OTHER PROJECTS, FOR ADDITIONS TO THIS PROJECT OR FOR COMPLETION OF THIS PROJECT BY OTHERS, UNLESS THE ARCHITECT IS ADJUDGED TO BE IN DEFAULT UNDER THIS AGREEMENT, EXCEPT BY AGREEMENT IN WRITING AND WITH APPROPRIATE COMPENSATION TO THE ARCHITECT.

NO.	DATE	REVISION/SUBMISSION
1	11/12/04	FIRE MARSHAL AND C.P. REVISIONS

McKINLEY MIDDLE MAGNET SCHOOL

1550 EDDIE ROBINSON SR. DRIVE
BATON ROUGE, LOUISIANA 70802

Robert M. Coleman & Partners Architects A.I.A.

3377 North Boulevard
Baton Rouge, Louisiana
70805
U.S.A.

tel 225.387.4414
fax 225.387.4883

OVERALL FLOORPLAN SECOND FLOOR

PROJECT NO. 03048	SHEET NO.. A2.2
DRAWN BY CS, BH	
CHECKED BY JS	
DATE October 15, 2004	OF

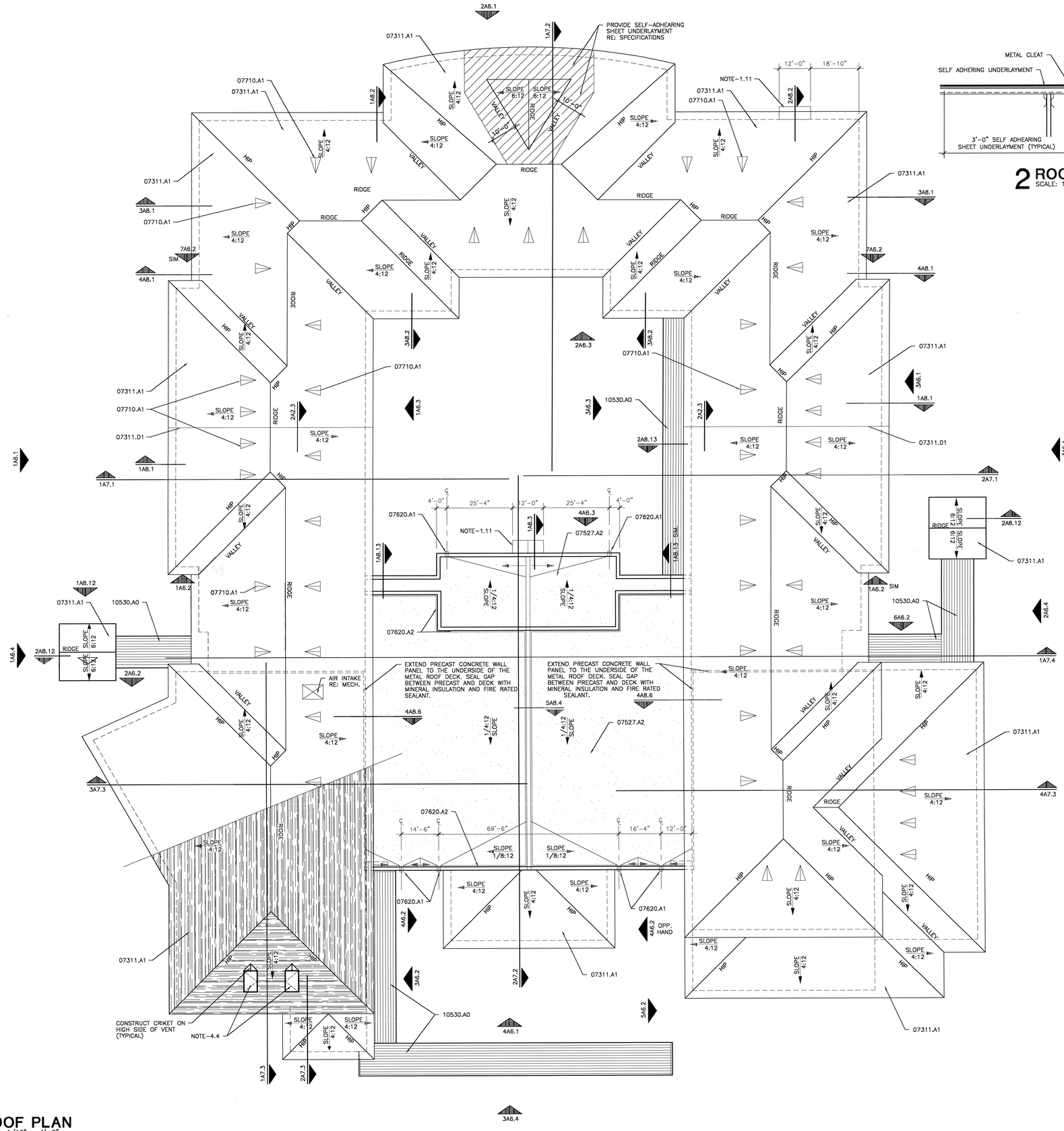

1 ROOF PLAN
SCALE: 1/16" = 1'-0"

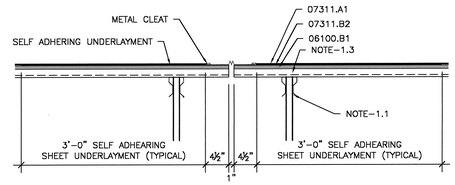

2 ROOF DETAIL
SCALE: 1/4" = 1'-0"

MATERIAL KEYNOTES

06100.B1	3/4" PLYWOOD SHEATHING
07311.A1	ASPHALT SHINGLES
07311.B2	2 LAYERS OF #15 ASPHALT SATURATED FELT
07311.D1	PREFINISHED METAL EXPANSION JOINT FLASHING AND CLEATS
07527.A2	SBS-MODIFIED BITUMEN CAPSHEET
07620.A1	SCUPPER, CONDUCTOR HEAD AND DOWN SPOUT RE: SPECIFICATIONS
07620.A2	PREFINISHED METAL COPING WITH CONTINUOUS HOLD DOWN CLEAT
07710.A1	MANUFACTURED COPPER GABLE END VENT
10530.A0	WALKWAY COVERS – DRAINABLE
NOTE-1.1	PRE-ENGINEERED ROOF TRUSS RE: STRUCTURAL
NOTE-1.3	METAL ROOF DECK RE: STRUCTURAL
NOTE-1.11	PRE-CAST CONCRETE CANOPY RE: STRUCTURE
NOTE-4.4	SMOKE VENT RE: MECHANICAL

KEY PLAN

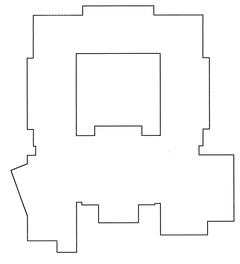

USE OF ARCHITECT'S DRAWINGS, SPECIFICATIONS AND OTHER DOCUMENTS

THE DRAWINGS, SPECIFICATIONS AND OTHER DOCUMENTS PREPARED BY THE ARCHITECT FOR THIS PROJECT ARE INSTRUMENTS OF THE ARCHITECT'S SERVICE FOR USE SOLELY WITH RESPECT TO THIS PROJECT AND, UNLESS OTHERWISE PROVIDED, THE ARCHITECT SHALL BE DEEMED THE AUTHOR OF THESE DOCUMENTS AND SHALL RETAIN ALL COMMON LAW, STATUTORY AND OTHER RESERVED RIGHTS, INCLUDING REPRODUCIBLE COPIES, OF THE ARCHITECT'S DRAWINGS, SPECIFICATIONS AND OTHER DOCUMENTS FOR INFORMATION AND REFERENCE IN CONNECTION WITH THE OWNER'S USE AND OCCUPANCY OF THE PROJECT. THE ARCHITECT'S DRAWINGS, SPECIFICATIONS OR OTHER DOCUMENTS SHALL NOT BE USED BY THE OWNER OR OTHERS ON OTHER PROJECTS, FOR ADDITIONS TO THIS PROJECT OR FOR COMPLETION OF THIS PROJECT BY OTHERS, UNLESS THE ARCHITECT IS ADJUDGED TO BE IN DEFAULT UNDER THIS AGREEMENT, EXCEPT BY AGREEMENT IN WRITING AND WITH APPROPRIATE COMPENSATION TO THE ARCHITECT.

NO.	DATE	REVISION/SUBMISSION
1	11/12/04	FIRE MARSHAL AND C.P. REVISIONS

McKINLEY MIDDLE MAGNET SCHOOL

1550 EDDIE ROBINSON SR. DRIVE
BATON ROUGE, LOUISIANA 70802

Robert M. Coleman & Partners Architects A.I.A.
3377 North Boulevard
Baton Rouge, Louisiana 70806 U.S.A.
tel 225.387.4414
fax 225.387.4693

OVERALL ROOF PLAN

PROJECT NO. 03048	SHEET NO.. A2.3
DRAWN BY CS, BH	
CHECKED BY JS	
DATE October 15, 2004	____ OF ____

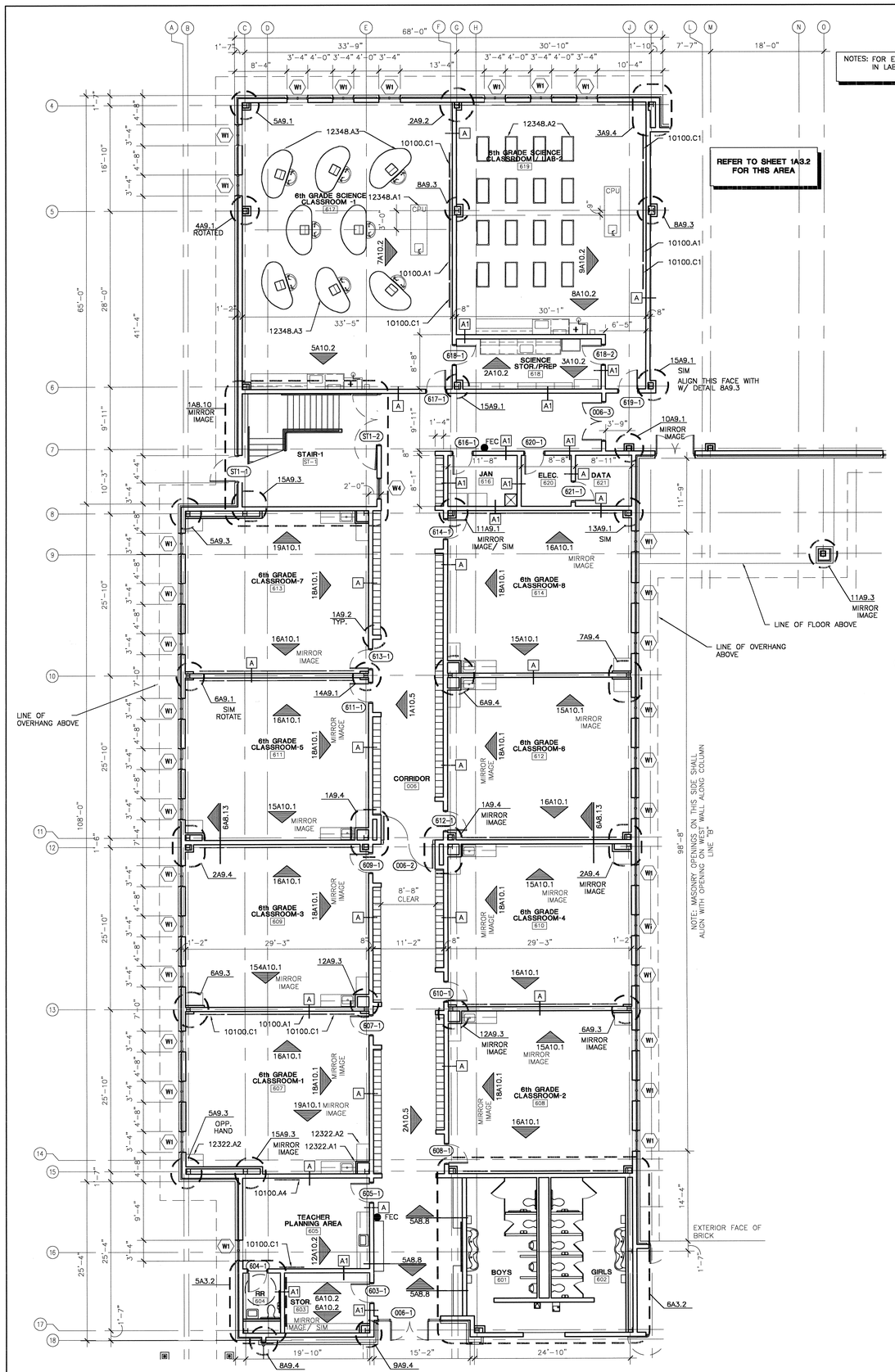

1 PARTIAL 1ST FLOOR PLAN - 6TH GRADE WING
SCALE: 1/8" = 1'-0"

NOTES: FOR TYPICAL 6TH GRADE CLASSROOM EQUIP. AND NOTES RE: TO CLASSROOM 607

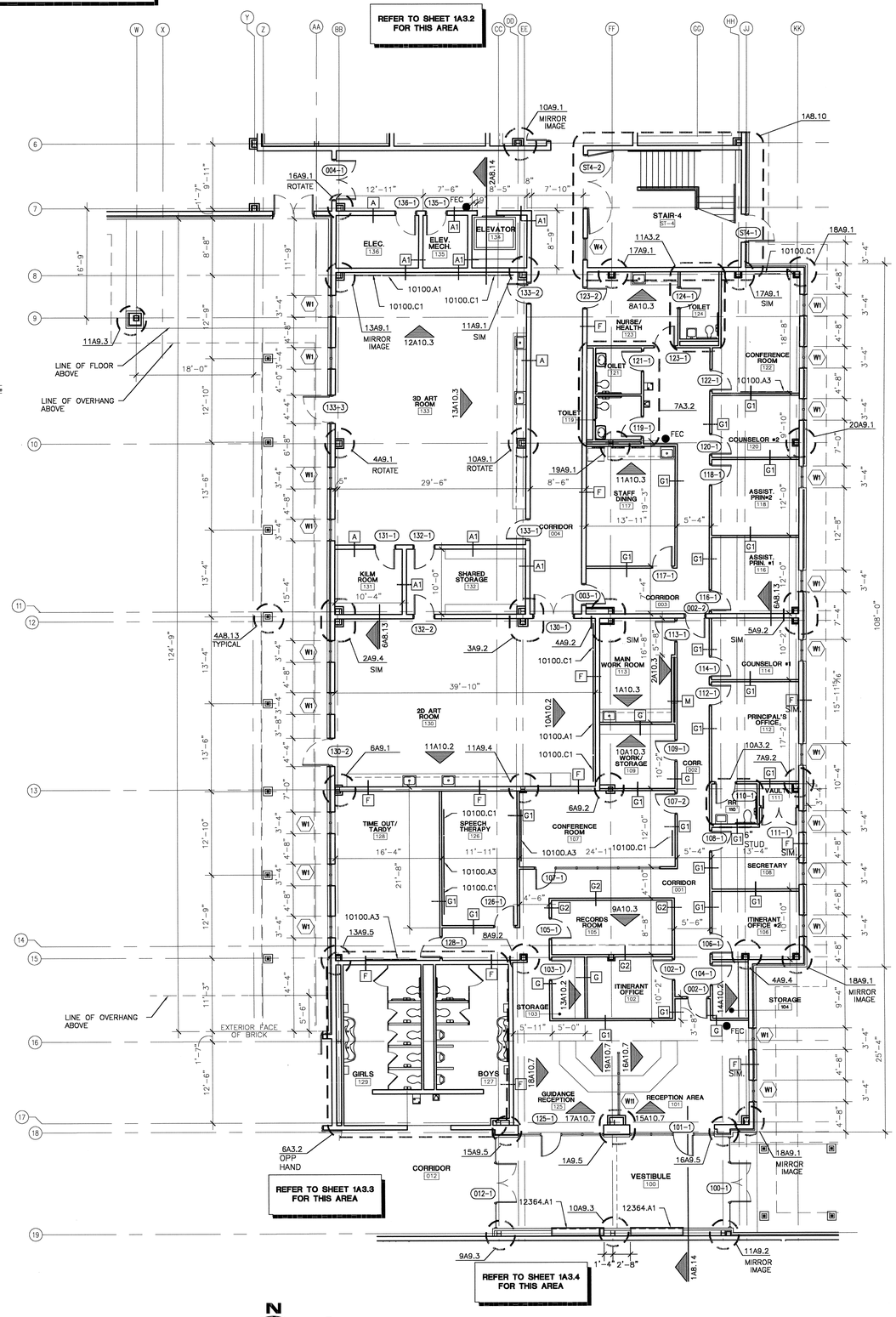

2 PARTIAL 1ST FLOOR PLAN - ADMINISTRATION WING
SCALE: 1/8" = 1'-0"

MATERIAL KEYNOTES

10100.A1	WHITE MARKER BOARD (DRY-ERASE) (4'H X 16'W)
10100.A3	WHITE MARKER BOARD (DRY-ERASE) (4'H X 8'W)
10100.A4	WHITE MARKER BOARD (DRY-ERASE) (4'H X 4'W)
10100.C1	TACKBOARD (4'H X 4'W)
12322.A1	PLASTIC LAMINATED FACE CASEWORK
12322.A2	PLASTIC LAMINATED FACE CASEWORK WARDROBE CABINET
12348.A1	TEACHERS LAB DEMONSTRATION TABLE
12348.A2	STUDENT LAB WORK TABLE (24"x48"X30" HIGH UTILITY TABLES)
12348.A3	STUDENT LAB TABLE
12364.A1	4'-0" X 8'-0" RECESSED TROPHY CASEWORK

LEGEND

1A10.1	ELEVATION TAG
A	PARTITION TYPE RE: A4.1
W6	WINDOW TYPE RE: A4.2
100-1	DOOR TYPE RE: A4.2
14A9.2	DETAIL TAG
FEC	FIRE EXTINGUISHER CABINET RE: SPEC 10520
FE	FIRE EXTINGUISHER MOUNT ON BRACKET RE: SPEC 10520

KEY PLAN

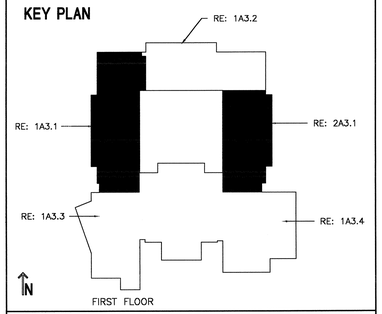

USE OF ARCHITECT'S DRAWINGS, SPECIFICATIONS AND OTHER DOCUMENTS

THE DRAWINGS, SPECIFICATIONS AND OTHER DOCUMENTS PREPARED BY THE ARCHITECT FOR THIS PROJECT ARE INSTRUMENTS OF THE ARCHITECT'S SERVICE FOR USE SOLELY WITH RESPECT TO THIS PROJECT AND, UNLESS OTHERWISE PROVIDED, THE ARCHITECT SHALL BE DEEMED THE AUTHOR OF THESE DOCUMENTS AND SHALL RETAIN ALL COMMON LAW, STATUTORY AND OTHER RESERVED RIGHTS, INCLUDING REPRODUCIBLE COPIES, OF THE ARCHITECT'S DRAWINGS, SPECIFICATIONS AND OTHER DOCUMENTS FOR INFORMATION AND REFERENCE IN CONNECTION WITH THE OWNER'S USE AND OCCUPANCY OF THE PROJECT. THE ARCHITECT'S DRAWINGS, SPECIFICATIONS OR OTHER DOCUMENTS SHALL NOT BE USED BY THE OWNER OR OTHERS ON OTHER PROJECTS, FOR ADDITIONS TO THIS PROJECT OR FOR COMPLETION OF THIS PROJECT BY OTHERS, UNLESS THE ARCHITECT IS ADJUDGED TO BE IN DEFAULT UNDER THIS AGREEMENT, EXCEPT BY AGREEMENT IN WRITING AND WITH APPROPRIATE COMPENSATION TO THE ARCHITECT.

NO.	DATE	REVISION/SUBMISSION
1	11/12/04	FIRE MARSHAL AND C.P. REVISIONS

McKINLEY MIDDLE MAGNET SCHOOL

1550 EDDIE ROBINSON SR. DRIVE
BATON ROUGE, LOUISIANA 70802

Robert M. Coleman Architects & Partners A.I.A.
3377 North Boulevard
Baton Rouge, Louisiana 70806 U.S.A.
tel 225.387.4414
fax 225.387.4693

PARTIAL FLOOR PLAN FIRST FLOOR

PROJECT NO.	03048
DRAWN BY	CS, BH, JM
CHECKED BY	JS
DATE	October 15, 2004
SHEET NO..	A3.1
OF	

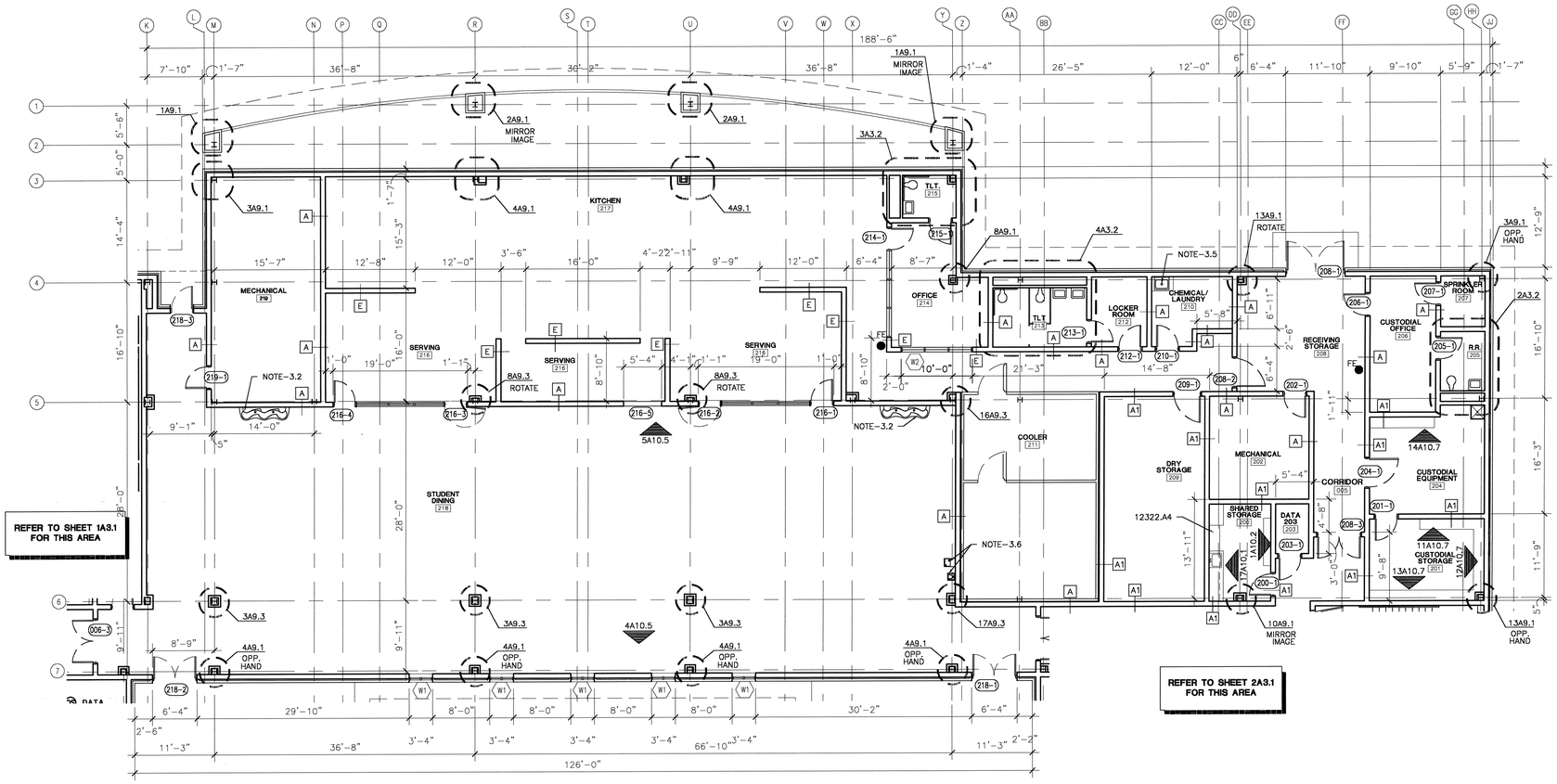

1 PARTIAL 1ST FLOOR PLAN - CAFETERIA WING
SCALE: 1/8" = 1'-0"

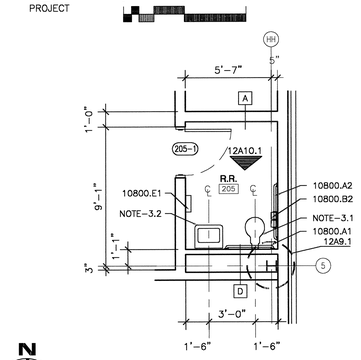

2 ENLARGED FLOOR PLAN
SCALE: 1/4" = 1'-0"

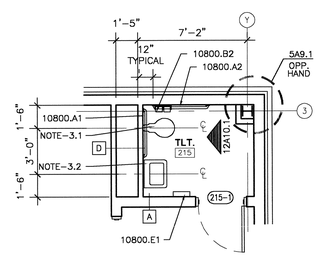

3 ENLARGED FLOOR PLAN
SCALE: 1/4" = 1'-0"

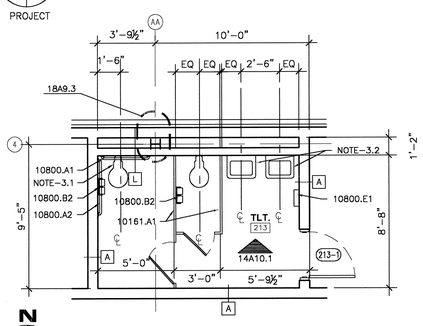

4 ENLARGED FLOOR PLAN
SCALE: 1/4" = 1'-0"

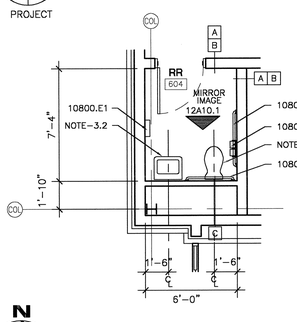

5 ENLARGED FLOOR PLAN
SCALE: 1/4" = 1'-0"

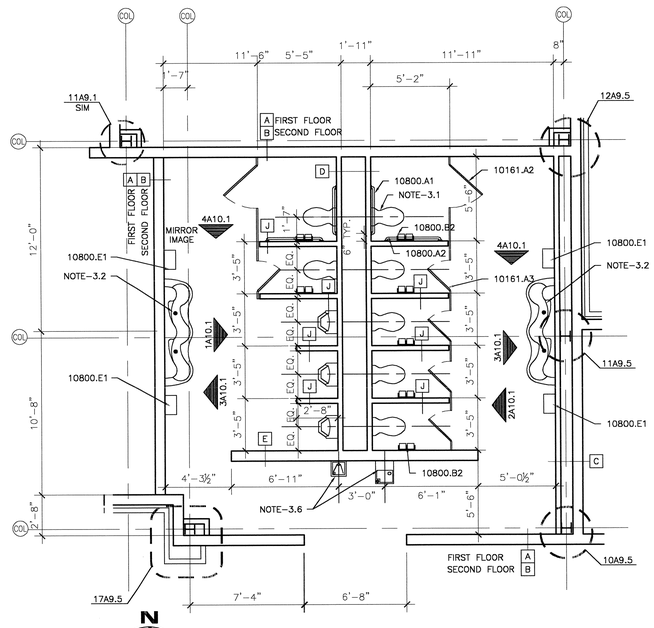

6 ENLARGED FLOOR PLAN
SCALE: 1/4" = 1'-0"

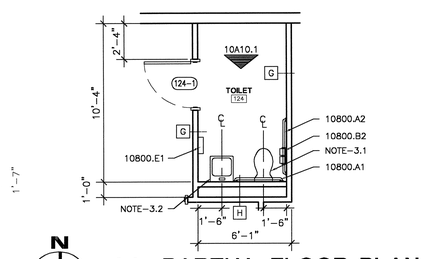

11 PARTIAL FLOOR PLAN
SCALE: 1/4" = 1'-0"

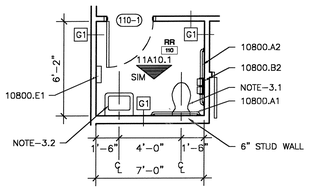

10 PARTIAL FLOOR PLAN
SCALE: 1/4" = 1'-0"

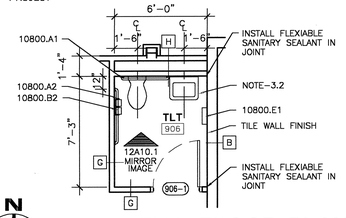

9 PARTIAL FLOOR PLAN
SCALE: 1/4" = 1'-0"

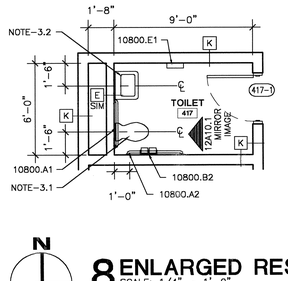

8 ENLARGED RESTROOM
SCALE: 1/4" = 1'-0"

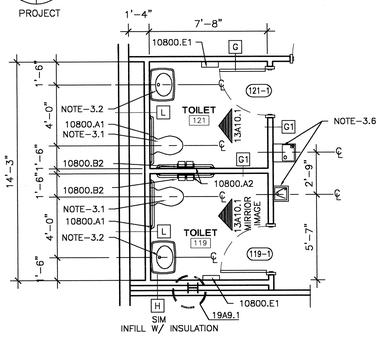

7 PARTIAL FLOOR PLAN
SCALE: 1/8" = 1'-0"

MATERIAL KEYNOTES

10161.A1	TOILET PARTITION
10161.A2	36" TOILET PARTITION DOOR
10161.A3	24" TOILET PARTITION DOOR
10800.A1	36" GRAB BAR
10800.A2	42" GRAB BAR
10800.B2	TOILET TISSUE DISPENSER (NOT IN CONTRACT)
10800.E1	ELECTRIC HAND DRYER
12322.A4	PLASTIC LAMINATED FACE CASEWORK BASE CABINET
NOTE-3.1	TOILET RE: PLUMBING
NOTE-3.2	LAVATORY RE: PLUMBING
NOTE-3.5	SINK RE: PLUMBING
NOTE-3.6	DRINKING FOUNTAIN RE: PLUMBING

LEGEND

1A10.1	ELEVATION TAG
A	PARTITION TYPE RE: A4.1
W8	WINDOW TYPE RE: A4.2
100-1	DOOR TYPE RE: A4.2
14A9.2	DETAIL TAG
FEC	FIRE EXTINGUISHER CABINET RE: SPEC 10520
FE	FIRE EXTINGUISHER MOUNT ON BRACKET RE: SPEC 10520

KEY PLAN

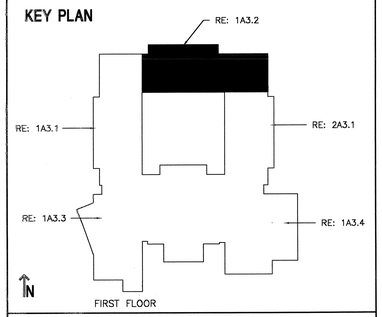

USE OF ARCHITECT'S DRAWINGS, SPECIFICATIONS AND OTHER DOCUMENTS

THE DRAWINGS, SPECIFICATIONS AND OTHER DOCUMENTS PREPARED BY THE ARCHITECT FOR THIS PROJECT ARE INSTRUMENTS OF THE ARCHITECT'S SERVICE FOR USE SOLELY WITH RESPECT TO THIS PROJECT AND, UNLESS OTHERWISE PROVIDED, THE ARCHITECT SHALL BE DEEMED THE AUTHOR OF THESE DOCUMENTS AND SHALL RETAIN ALL COMMON LAW, STATUTORY AND OTHER RESERVED RIGHTS, INCLUDING REPRODUCIBLE COPIES. OF THE ARCHITECT'S DRAWINGS, SPECIFICATIONS AND OTHER DOCUMENTS FOR INFORMATION AND REFERENCE IN CONNECTION WITH THE OWNER'S USE AND OCCUPANCY OF THE PROJECT. THE ARCHITECT'S DRAWINGS, SPECIFICATIONS OR OTHER DOCUMENTS SHALL NOT BE USED BY THE OWNER OR OTHERS ON OTHER PROJECTS, FOR ADDITIONS TO THIS PROJECT OR FOR COMPLETION OF THIS PROJECT BY OTHERS, UNLESS THE ARCHITECT IS ADJUDGED TO BE IN DEFAULT UNDER THIS AGREEMENT, EXCEPT BY AGREEMENT IN WRITING AND WITH APPROPRIATE COMPENSATION TO THE ARCHITECT.

NO.	DATE	REVISION/SUBMISSION
1	11/12/04	FIRE MARSHAL AND C.P. REVISIONS

McKINLEY MIDDLE MAGNET SCHOOL

1550 EDDIE ROBINSON SR. DRIVE
BATON ROUGE, LOUISIANA 70802

Robert M. Coleman Architects & Partners A.I.A.
3377 North Boulevard
Baton Rouge, Louisiana 70806
U.S.A.
tel 225.387.4414
fax 225.387.4693

PARTIAL FLOOR PLAN FIRST FLOOR

PROJECT NO. 03048	SHEET NO.. A3.2
DRAWN BY CS, BH, JM	
CHECKED BY JS	
DATE October 15, 2004	OF

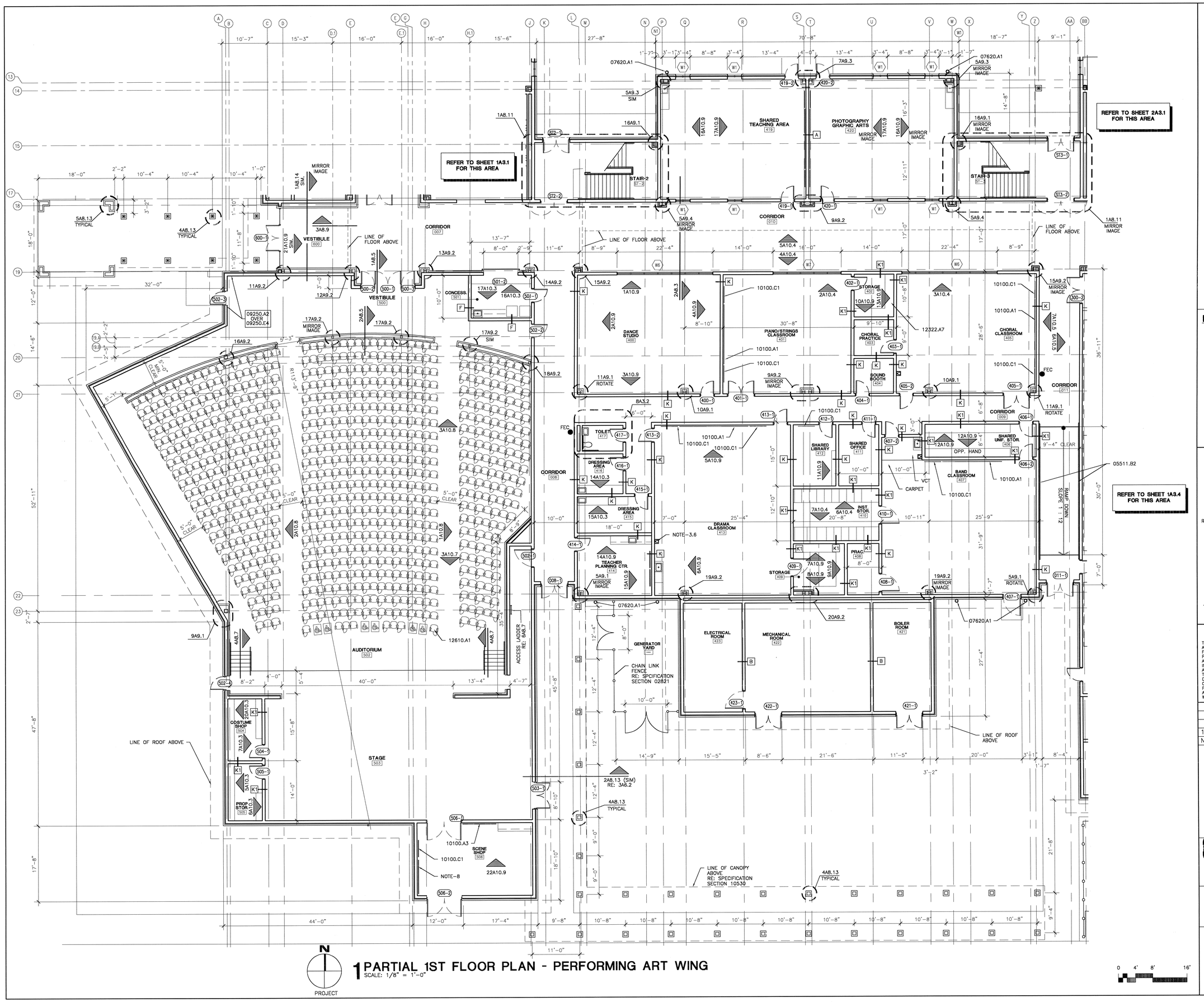

1 PARTIAL 1ST FLOOR PLAN - PERFORMING ART WING
SCALE: 1/8" = 1'-0"

0 4' 8' 16'

MATERIAL KEYNOTES

05511.B2	1 1/2" O.D. STEEL HANDRAIL
07620.A1	SCUPPER, CONDUCTOR HEAD AND DOWN SPOUT RE: SPECIFICATIONS
09250.A2	5/8" IMPACT RESISTANT GYPSUM BOARD
09250.E4	7/8" METAL FURRING CHANNEL @ 16" O.C.
10100.A1	WHITE MARKER BOARD (DRY-ERASE) (4'H X 16'W)
10100.A3	WHITE MARKER BOARD (DRY-ERASE) (4'H X 8'W)
10100.C1	TACKBOARD (4'H X 4'W)
12322.A7	OPEN STORAGE SHELVING WITH 4 ADJUSTABLE SHELVES AND ONE FIXED, WIDTH INDICATED ON DRAWINGS, 24" DEEP BY 84" HIGH
12610.A1	FIXED AUDIENCE SEATING
NOTE-3.6	DRINKING FOUNTAIN RE: PLUMBING
NOTE-8	8'-0" x 8'-0" PEG BOARD WITH 3/4" STAND-OFFS FOR TOOLS

LEGEND

1A10.1	ELEVATION TAG
A	PARTITION TYPE RE: A4.1
W6	WINDOW TYPE RE: A4.2
100-1	DOOR TYPE RE: A4.2
14A9.2	DETAIL TAG
FEC	FIRE EXTINGUISHER CABINET RE: SPEC 10520
FE	FIRE EXTINGUISHER MOUNT ON BRACKET RE: SPEC 10520

KEY PLAN

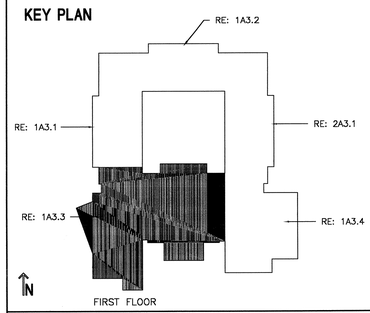

USE OF ARCHITECT'S DRAWINGS, SPECIFICATIONS AND OTHER DOCUMENTS

THE DRAWINGS, SPECIFICATIONS AND OTHER DOCUMENTS PREPARED BY THE ARCHITECT FOR THIS PROJECT ARE INSTRUMENTS OF THE ARCHITECT'S SERVICE FOR USE SOLELY WITH RESPECT TO THIS PROJECT AND, UNLESS OTHERWISE PROVIDED, THE ARCHITECT SHALL BE DEEMED THE AUTHOR OF THESE DOCUMENTS AND SHALL RETAIN ALL COMMON LAW, STATUTORY AND OTHER RESERVED RIGHTS, INCLUDING REPRODUCIBLE COPIES, OF THE ARCHITECT'S DRAWINGS, SPECIFICATIONS AND OTHER DOCUMENTS FOR INFORMATION AND REFERENCE IN CONNECTION WITH THE OWNER'S USE AND OCCUPANCY OF THE PROJECT. THE ARCHITECT'S DRAWINGS, SPECIFICATIONS OR OTHER DOCUMENTS SHALL NOT BE USED BY THE OWNER OR OTHERS ON OTHER PROJECTS, FOR ADDITIONS TO THIS PROJECT OR FOR COMPLETION OF THIS PROJECT BY OTHERS, UNLESS THE ARCHITECT IS ADJUDGED TO BE IN DEFAULT UNDER THIS AGREEMENT, EXCEPT BY AGREEMENT IN WRITING AND WITH APPROPRIATE COMPENSATION TO THE ARCHITECT.

NO.	DATE	REVISION/SUBMISSION
1	11/12/04	FIRE MARSHAL AND C.P. REVISIONS

McKINLEY MIDDLE MAGNET SCHOOL

1550 EDDIE ROBINSON SR. DRIVE
BATON ROUGE, LOUISIANA 70802

Robert M. Coleman & Partners Architects A.I.A.
3377 North Boulevard
Baton Rouge, Louisiana 70806
U.S.A.
tel 225.387.4414
fax 225.387.4693

PARTIAL FLOOR PLAN FIRST FLOOR

PROJECT NO. 03048	SHEET NO.. A3.3
DRAWN BY CS, BH, JM	
CHECKED BY JS	
DATE October 15, 2004	OF

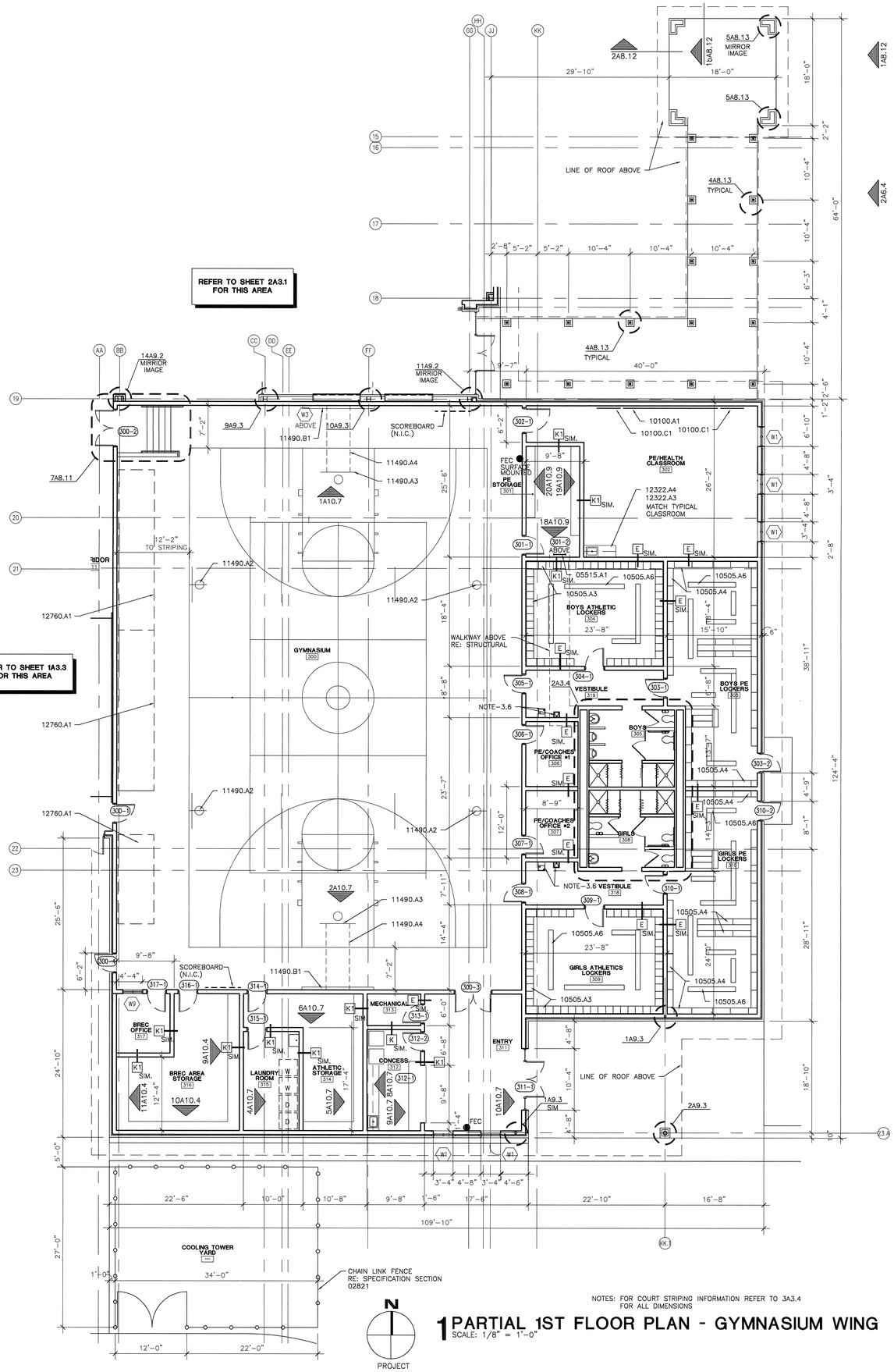

NOTES: FOR COURT STRIPING INFORMATION REFER TO 3A3.4 FOR ALL DIMENSIONS

1 PARTIAL 1ST FLOOR PLAN - GYMNASIUM WING
SCALE: 1/8" = 1'-0"

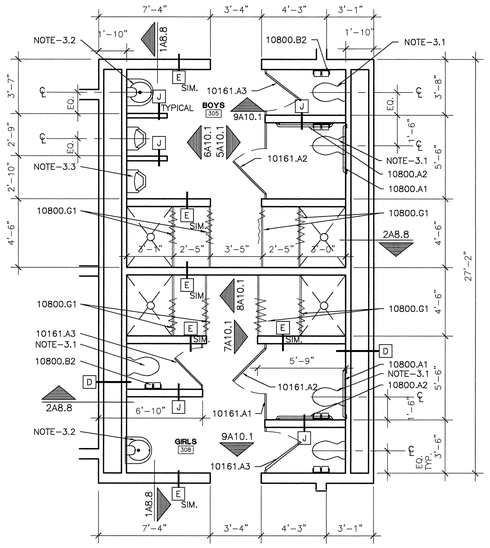

2 PARTIAL FLOOR PLAN
SCALE: 1/4" = 1'-0"

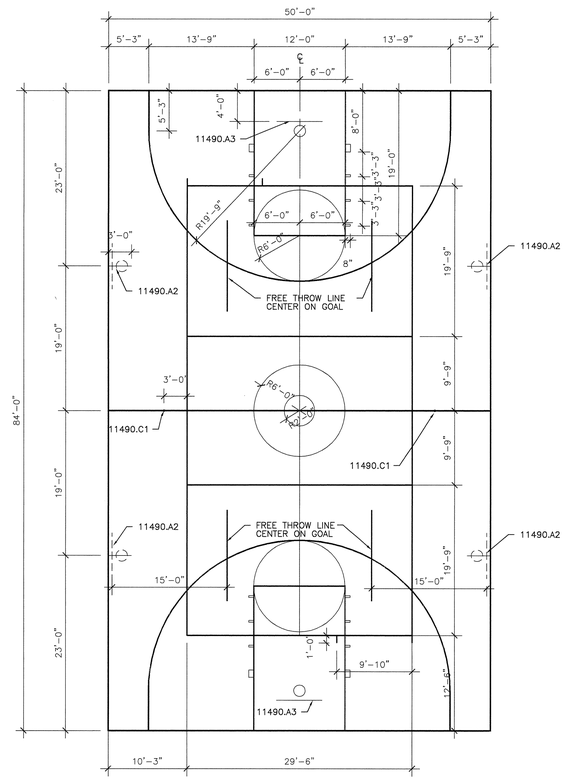

3 STRIPING PLAN
SCALE: 1/4" = 1'-0"

MATERIAL KEYNOTES

05515.A1	FIXED ALUMINUM WALL LADDER
10100.A1	WHITE MARKER BOARD (DRY-ERASE) (4'H X 16'W)
10100.C1	TACKBOARD (4'H X 4'W)
10161.A1	TOILET PARTITION
10161.A2	36" TOILET PARTITION DOOR
10161.A3	24" TOILET PARTITION DOOR
10505.A3	ATHLETIC LOCKER – TYPE II SINGLE TIER WITH SLOPED TOP
10505.A4	PE LOCKER – TYPE IV COMBINATION OF DBL. TIER AND 6 STACKED
10505.A6	BENCHES
10800.A1	36" GRAB BAR
10800.A2	42" GRAB BAR
10800.B2	TOILET TISSUE DISPENSER (NOT IN CONTRACT)
10800.G1	SHOWER ROD AND CURTAIN
11490.A2	RETRACTABLE BASKETBALL GOAL (FIBERGLASS)
11490.A3	BASKETBALL GOAL (TEMPERED GLASS)
11490.A4	BASKETBALL GOAL SUPPORT
11490.B1	WALL SAFETY PAD
11490.C1	VOLLEYBALL FLOOR SLEEVE
12322.A3	PLASTIC LAMINATED FACE CASEWORK UPPER CABINET
12322.A4	PLASTIC LAMINATED FACE CASEWORK BASE CABINET
12760.A1	ALUMINUM BLEACHERS
NOTE-3.1	TOILET RE: PLUMBING
NOTE-3.2	LAVATORY RE: PLUMBING
NOTE-3.3	URINAL RE: PLUMBING
NOTE-3.6	DRINKING FOUNTAIN RE: PLUMBING

LEGEND

1A10.1	ELEVATION TAG
A	PARTITION TYPE RE: A4.1
W3	WINDOW TYPE RE: A4.2
100-1	DOOR TYPE RE: A4.2
14A9.2	DETAIL TAG
FEC	FIRE EXTINGUISHER CABINET RE: SPEC 10520
FE	FIRE EXTINGUISHER MOUNT ON BRACKET RE: SPEC 10520

KEY PLAN

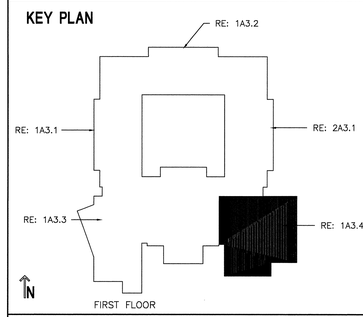

USE OF ARCHITECT'S DRAWINGS, SPECIFICATIONS AND OTHER DOCUMENTS

THE DRAWINGS, SPECIFICATIONS AND OTHER DOCUMENTS PREPARED BY THE ARCHITECT FOR THIS PROJECT ARE INSTRUMENTS OF THE ARCHITECT'S SERVICE FOR USE SOLELY WITH RESPECT TO THIS PROJECT AND, UNLESS OTHERWISE PROVIDED, THE ARCHITECT SHALL BE DEEMED THE AUTHOR OF THESE DOCUMENTS AND SHALL RETAIN ALL COMMON LAW, STATUTORY AND OTHER RESERVED RIGHTS, INCLUDING REPRODUCIBLE COPIES, OF THE ARCHITECT'S DRAWINGS, SPECIFICATIONS AND OTHER DOCUMENTS FOR INFORMATION AND REFERENCE IN CONNECTION WITH THE OWNER'S USE AND OCCUPANCY OF THE PROJECT. THE ARCHITECT'S DRAWINGS, SPECIFICATIONS OR OTHER DOCUMENTS SHALL NOT BE USED BY THE OWNER OR OTHERS ON OTHER PROJECTS, FOR ADDITIONS TO THIS PROJECT OR FOR COMPLETION OF THIS PROJECT BY OTHERS, UNLESS THE ARCHITECT IS ADJUDGED TO BE IN DEFAULT UNDER THIS AGREEMENT, EXCEPT BY AGREEMENT IN WRITING AND WITH APPROPRIATE COMPENSATION TO THE ARCHITECT.

NO.	DATE	REVISION/SUBMISSION
1	11/12/04	FIRE MARSHAL AND C.P. REVISIONS

McKINLEY MIDDLE MAGNET SCHOOL

1550 EDDIE ROBINSON SR. DRIVE
BATON ROUGE, LOUISIANA 70802

Robert M. Coleman & Partners Architects A.I.A.
3377 North Boulevard
Baton Rouge, Louisiana 70806
U.S.A.
tel 225.387.4414
fax 225.387.4693

PARTIAL FLOOR PLAN FIRST FLOOR

PROJECT NO. 03048	SHEET NO.. A3.4
DRAWN BY CS, BH, JM	
CHECKED BY JS	
DATE October 15, 2004	OF

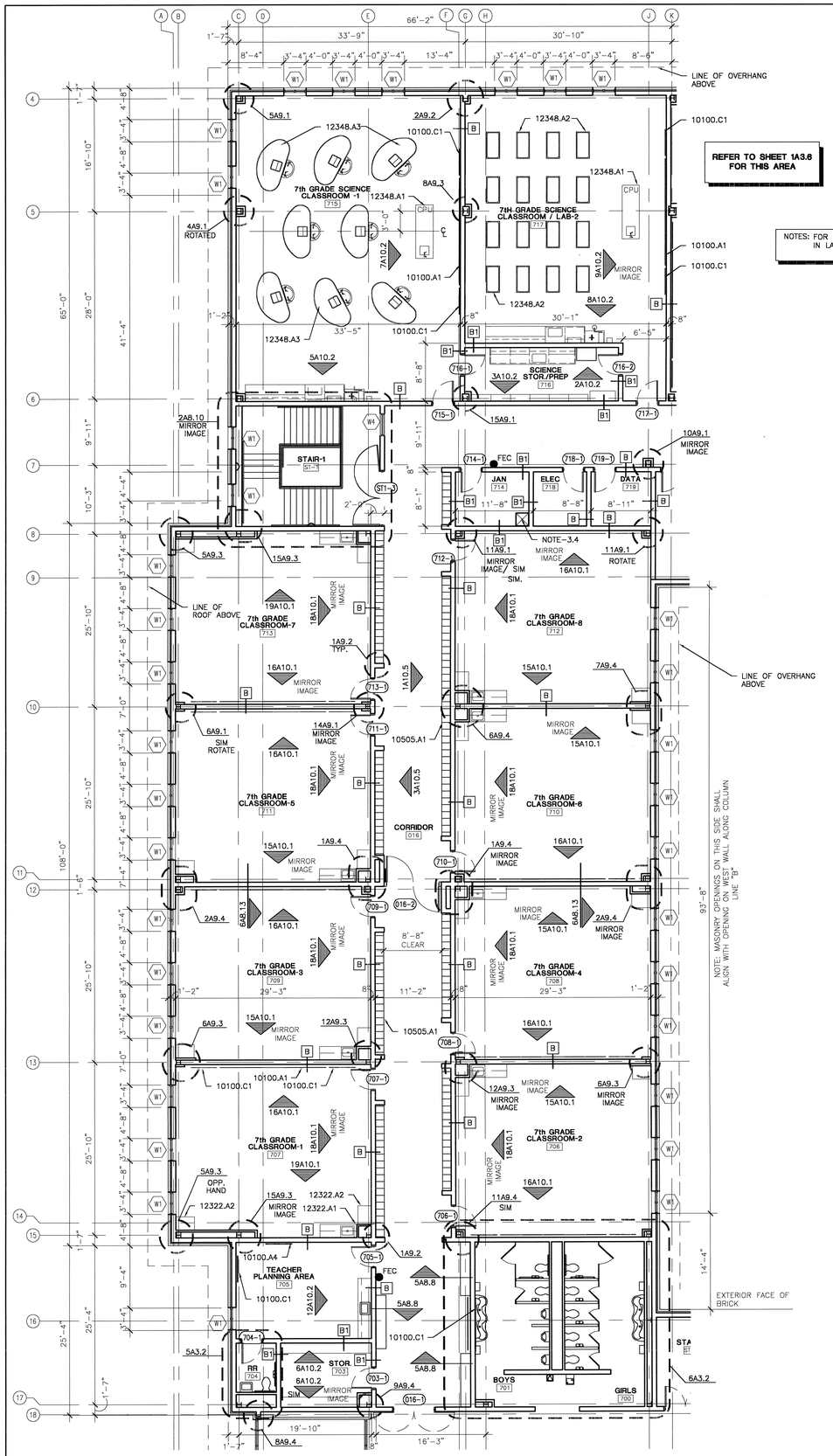

1 PARTIAL 2ND FLOOR PLAN - 7TH GRADE WING
SCALE: 1/8" = 1'-0"

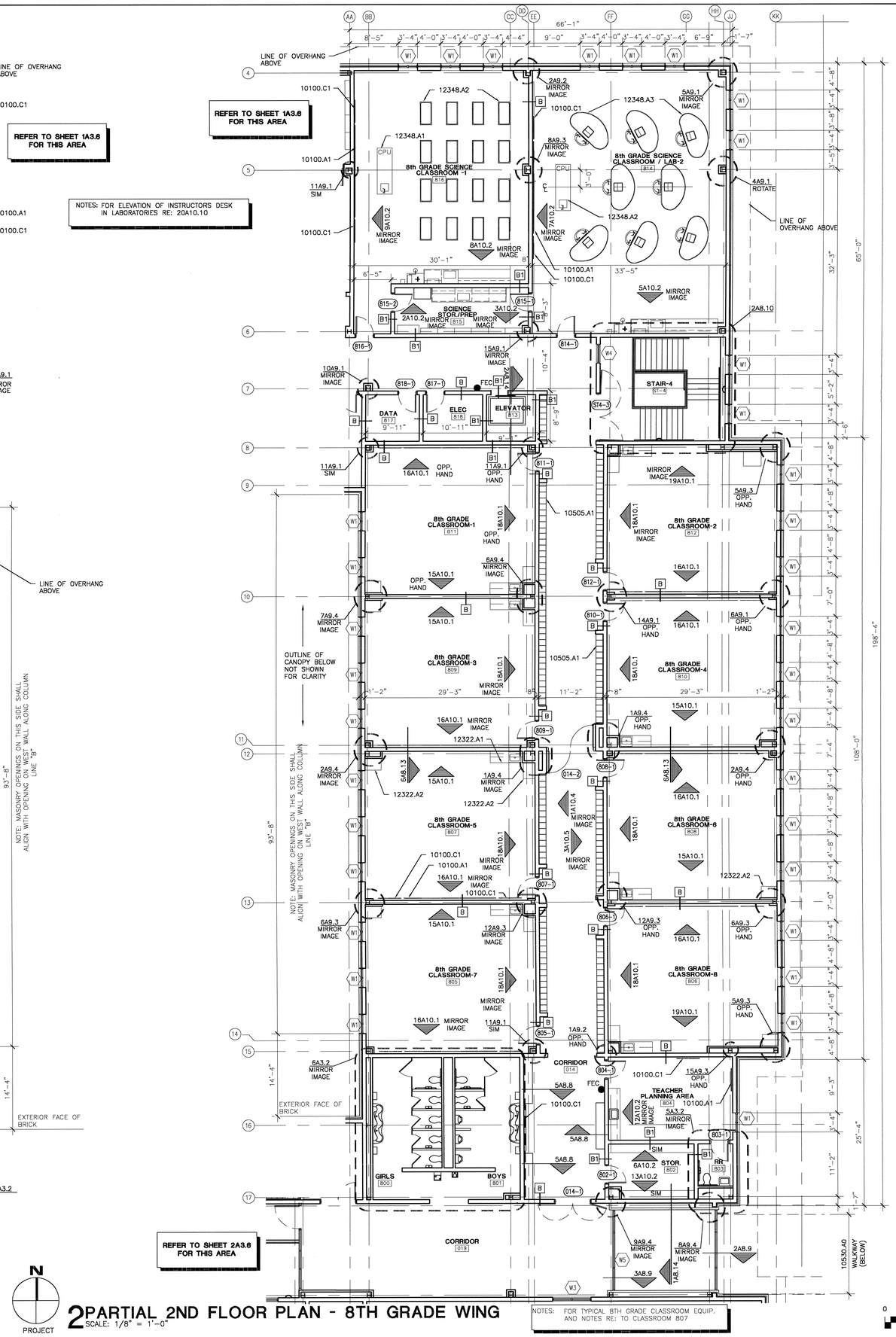

2 PARTIAL 2ND FLOOR PLAN - 8TH GRADE WING
SCALE: 1/8" = 1'-0"

MATERIAL KEYNOTES

10100.A1	WHITE MARKER BOARD (DRY-ERASE) (4'H X 16'W)
10100.A4	WHITE MARKER BOARD (DRY-ERASE) (4'H X 4'W)
10100.C1	TACKBOARD (4'H X 4'W)
10505.A1	CORRIDOR LOCKER – TYPE I DBL. TIER (12"X15"X36") WITH SLOPED TOP
10530.A0	WALKWAY COVERS – DRAINABLE
12322.A1	PLASTIC LAMINATED FACE CASEWORK
12322.A2	PLASTIC LAMINATED FACE CASEWORK WARDROBE CABINET
12348.A1	TEACHERS LAB DEMONSTRATION TABLE
12348.A2	STUDENT LAB WORK TABLE (24"x48"X30" HIGH UTILITY TABLES)
12348.A3	STUDENT LAB TABLE
NOTE-3.4	MOP SINK RE: PLUMBING

LEGEND

- 1A10.1 — ELEVATION TAG
- A — PARTITION TYPE RE: A4.1
- W5 — WINDOW TYPE RE: A4.2
- 100-1 — DOOR TYPE RE: A4.2
- 14A9.2 — DETAIL TAG
- FEC — FIRE EXTINGUISHER CABINET RE: SPEC 10520
- FE — FIRE EXTINGUISHER MOUNT ON BRACKET RE: SPEC 10520

KEY PLAN

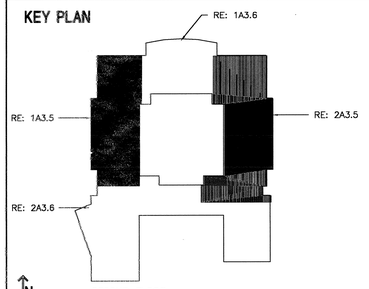

USE OF ARCHITECT'S DRAWINGS, SPECIFICATIONS AND OTHER DOCUMENTS

THE DRAWINGS, SPECIFICATIONS AND OTHER DOCUMENTS PREPARED BY THE ARCHITECT FOR THIS PROJECT ARE INSTRUMENTS OF THE ARCHITECT'S SERVICE FOR USE SOLELY WITH RESPECT TO THIS PROJECT AND, UNLESS OTHERWISE PROVIDED, THE ARCHITECT SHALL BE DEEMED THE AUTHOR OF THESE DOCUMENTS AND SHALL RETAIN ALL COMMON LAW, STATUTORY AND OTHER RESERVED RIGHTS, INCLUDING REPRODUCIBLE COPIES, OF THE ARCHITECT'S DRAWINGS, SPECIFICATIONS AND OTHER DOCUMENTS FOR INFORMATION AND REFERENCE IN CONNECTION WITH THE OWNER'S USE AND OCCUPANCY OF THE PROJECT. THE ARCHITECT'S DRAWINGS, SPECIFICATIONS OR OTHER DOCUMENTS SHALL NOT BE USED BY THE OWNER OR OTHERS ON OTHER PROJECTS, FOR ADDITIONS TO THIS PROJECT OR FOR COMPLETION OF THIS PROJECT BY OTHERS, UNLESS THE ARCHITECT IS ADJUDGED TO BE IN DEFAULT UNDER THIS AGREEMENT, EXCEPT BY AGREEMENT IN WRITING AND WITH APPROPRIATE COMPENSATION TO THE ARCHITECT.

NO.	DATE	REVISION/SUBMISSION
1	11/12/04	FIRE MARSHAL AND C.P. REVISIONS

McKINLEY MIDDLE MAGNET SCHOOL

1550 EDDIE ROBINSON SR. DRIVE
BATON ROUGE, LOUISIANA 70802

Robert M. Coleman & Partners Architects A.I.A.
3377 North Boulevard
Baton Rouge, Louisiana 70806
U.S.A.
tel 225.387.4414
fax 225.387.4693

PARTIAL FLOOR PLAN SECOND FLOOR

PROJECT NO. 03048	SHEET NO.. A3.5
DRAWN BY CS, BH, JM	
CHECKED BY JS	
DATE October 15, 2004	OF

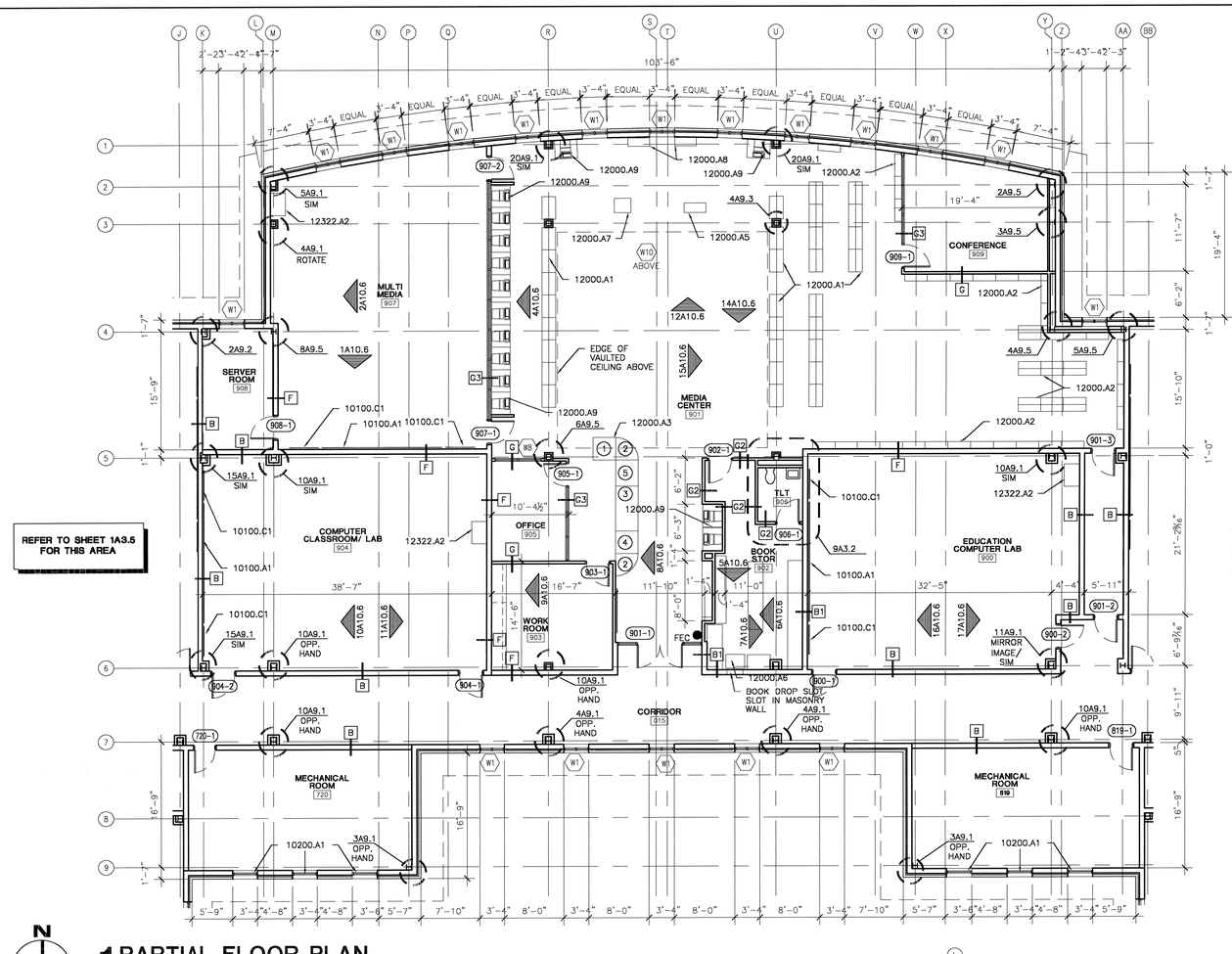

1 PARTIAL FLOOR PLAN
SCALE: 1/8" = 1'-0"

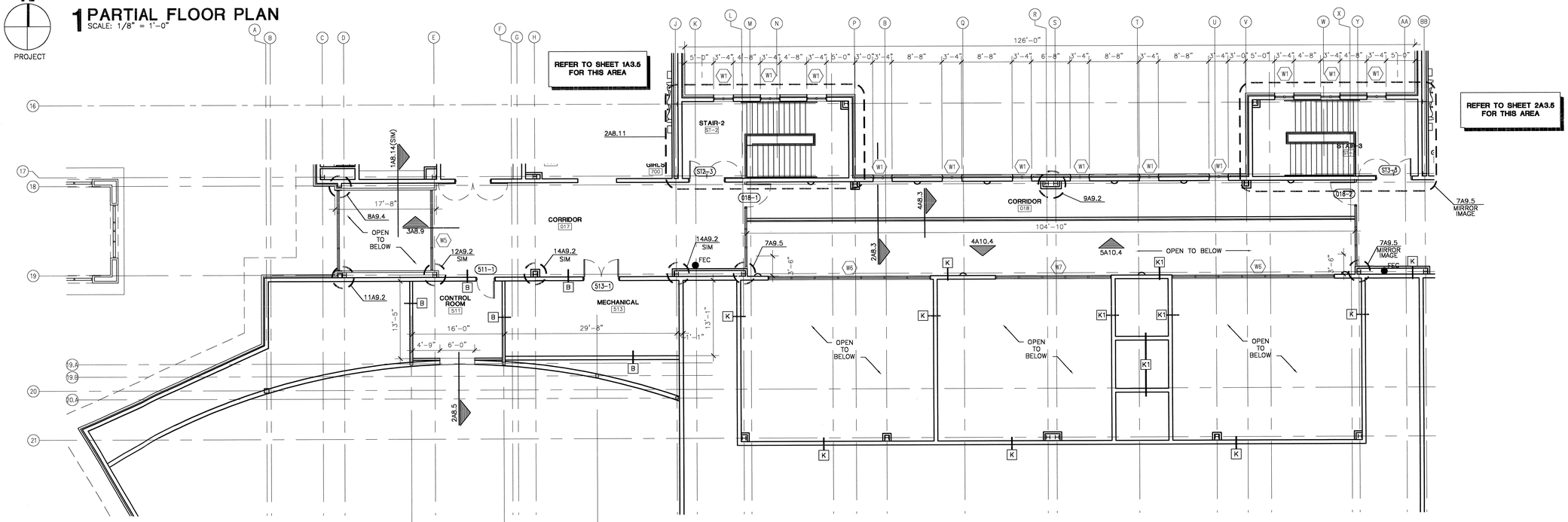

2 PARTIAL FLOOR PLAN
SCALE: 1/8" = 1'-0"

NOTES:

CIRCULATION DESK CONSISTS OF THE FOLLOWING COMPONENTS

1	12000.A10	LIBRARY FURNITURE – CIRCULATION DESK CABINET UNIT W/ HINGED DOORS AND DRAWERS 36"W x 30"D x 38"H
2	12000.A11	LIBRARY FURNITURE – CIRCULATION DESK CLOSED RADIUSED CORNER UNIT 30"D x 38"H
3	12000.A12	LIBRARY FURNITURE – CIRCULATION DESK COMPUTER CENTER W/ HORIZONTAL CPU PEDESTAL/ PRINTER SHELF 72"W x 30"d x 38"H
4	12000.A13	LIBRARY FURNITURE – CIRCULATION DESK BOOK RETURN UNIT 36"W x 30"D x 38"H
5	12000.A14	LIBRARY FURNITURE – CIRCULATION DESK FRONT ACCESS DESK FOR ADA 42"W x 30"D x 32"W

MATERIAL KEYNOTES

10100.A1	WHITE MARKER BOARD (DRY–ERASE) (4'H X 16'W)
10100.C1	TACKBOARD (4'H X 4'W)
12000.A1	LIBRARY FURNITURE – LOW SHELVING UNIT
12000.A2	LIBRARY FURNITURE – HIGH SHELVING UNIT
12000.A3	LIBRARY FURNITURE – CIRCULATION DESK
12000.A5	LIBRARY FURNITURE – PERIODICAL SHELVING
12000.A6	LIBRARY FURNITURE – DEPRESSIBLE BOOK TRUCK
12000.A7	LIBRARY FURNITURE – ATLAS CASE
12000.A8	LIBRARY FURNITURE – MAGAZINE RACK
12000.A9	LIBRARY FURNITURE – COMPUTER STATION
12322.A2	PLASTIC LAMINATED FACE CASEWORK WARDROBE CABINET

LEGEND

1A10.1	ELEVATION TAG
A	PARTITION TYPE RE: A4.1
W5	WINDOW TYPE RE: A4.2
100–1	DOOR TYPE RE: A4.2
14A9.2	DETAIL TAG
FEC	FIRE EXTINGUISHER CABINET RE: SPEC 10520
FE	FIRE EXTINGUISHER MOUNT ON BRACKET RE: SPEC 10520

KEY PLAN

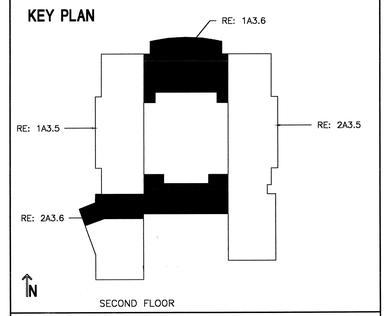

USE OF ARCHITECT'S DRAWINGS, SPECIFICATIONS AND OTHER DOCUMENTS

THE DRAWINGS, SPECIFICATIONS AND OTHER DOCUMENTS PREPARED BY THE ARCHITECT FOR THIS PROJECT ARE INSTRUMENTS OF THE ARCHITECT'S SERVICE FOR USE SOLELY WITH RESPECT TO THIS PROJECT AND, UNLESS OTHERWISE PROVIDED, THE ARCHITECT SHALL BE DEEMED THE AUTHOR OF THESE DOCUMENTS AND SHALL RETAIN ALL COMMON LAW, STATUTORY AND OTHER RESERVED RIGHTS, INCLUDING REPRODUCIBLE COPIES, OF THE ARCHITECT'S DRAWINGS, SPECIFICATIONS AND OTHER DOCUMENTS FOR INFORMATION AND REFERENCE IN CONNECTION WITH THE OWNER'S USE AND OCCUPANCY OF THE PROJECT. THE ARCHITECT'S DRAWINGS, SPECIFICATIONS OR OTHER DOCUMENTS SHALL NOT BE USED BY THE OWNER OR OTHERS ON OTHER PROJECTS, FOR ADDITIONS TO THIS PROJECT OR FOR COMPLETION OF THIS PROJECT BY OTHERS, UNLESS THE ARCHITECT IS ADJUDGED TO BE IN DEFAULT UNDER THIS AGREEMENT, EXCEPT BY AGREEMENT IN WRITING AND WITH APPROPRIATE COMPENSATION TO THE ARCHITECT.

NO.	DATE	REVISION/SUBMISSION
1	11/12/04	FIRE MARSHAL AND C.P. REVISIONS

McKINLEY MIDDLE MAGNET SCHOOL

1550 EDDIE ROBINSON SR. DRIVE
BATON ROUGE, LOUISIANA 70802

Robert M. Coleman & Partners Architects A.I.A.
3377 North Boulevard
Baton Rouge, Louisiana 70806
U.S.A.
tel 225.387.4414
fax 225.387.4693

PARTIAL FLOOR PLAN SECOND FLOOR

PROJECT NO. 03048	SHEET NO..
DRAWN BY CS, BH, JM	A3.6
CHECKED BY JS	
DATE October 15, 2004	OF

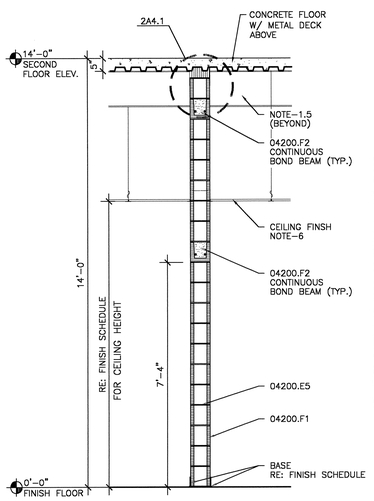

WALL TYPE "A"
WALL TYPE "A1"
ONE HOUR RATED WALL CONSTRUCTED SIMILAR TO WALL "A" WITH RATED "HEAD OF WALL" ASSEMBLY

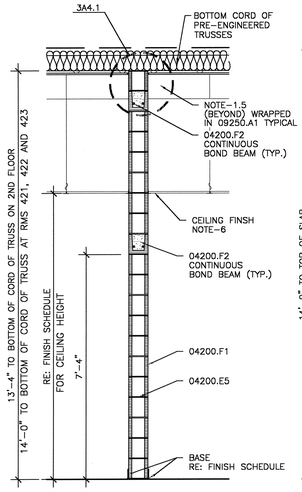

WALL TYPE "B"
WALL TYPE "B1"
ONE HOUR RATED WALL CONSTRUCTED SIMILAR TO WALL "B" WITH RATED "HEAD OF WALL" ASSEMBLY

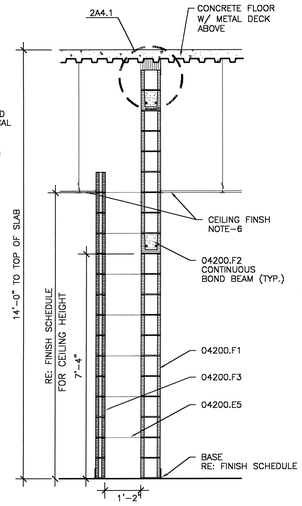

WALL TYPE "C"

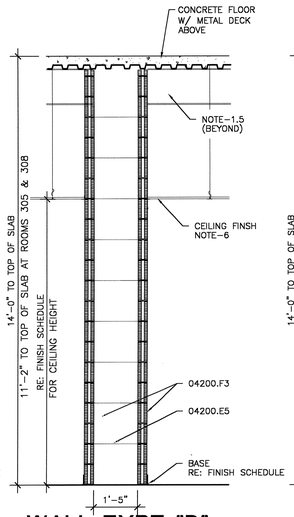

WALL TYPE "D"

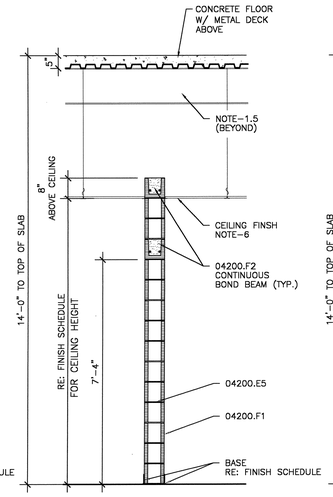

WALL TYPE "E"

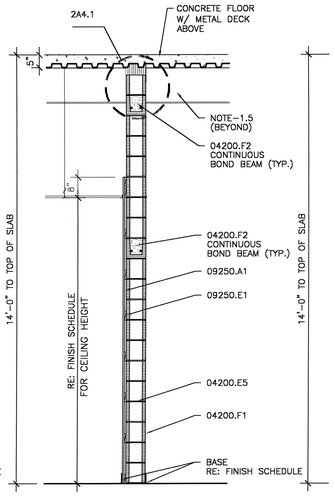

WALL TYPE "F"

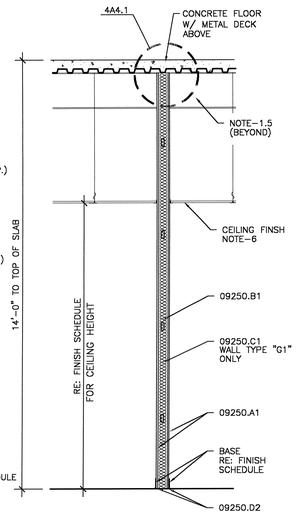

WALL TYPE "G"
WALL TYPE "G1"
INFILL WALL WITH SOUND ATTENUATION INSULATION

WALL TYPE "G2"
ONE HOUR RATED PER UL# U419
AND INFILLED WITH SOUND ATTENUATION INSULATION

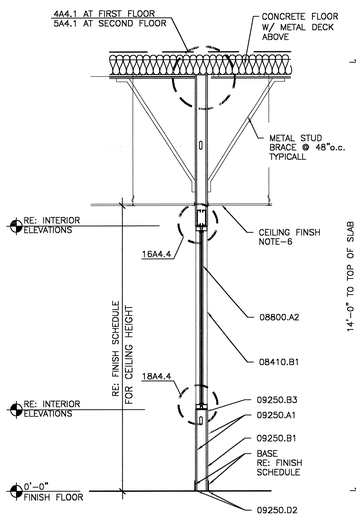

WALL TYPE "G3"

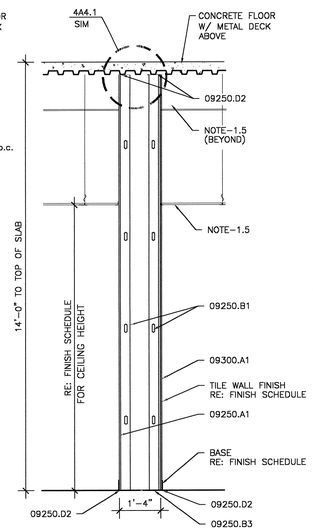

WALL TYPE "H"

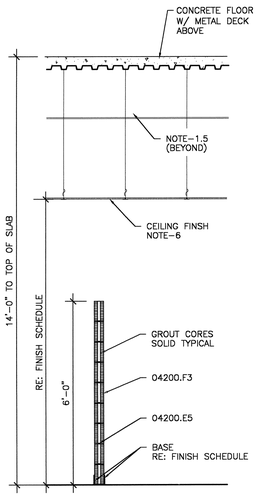

WALL TYPE "J"

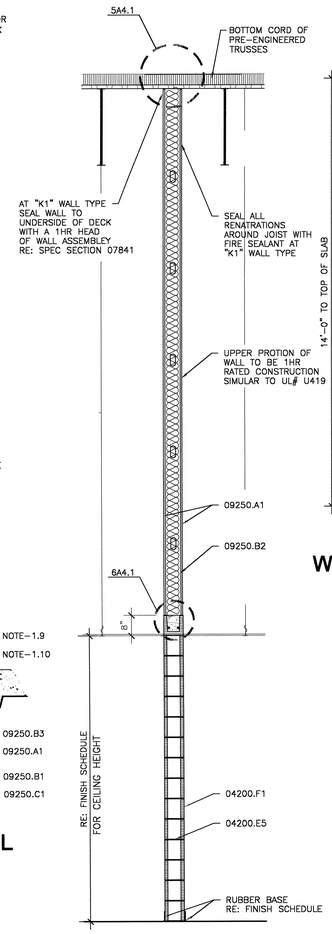

WALL TYPE "K"
WALL TYPE "K1"
ONE HOUR RATED WALL

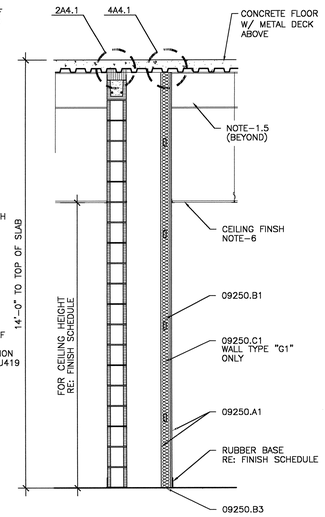

WALL TYPE "L"

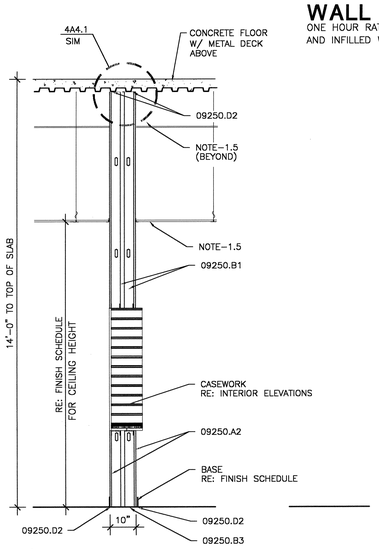

WALL TYPE "M"

1 WALL TYPES
SCALE: 1/2" = 1'-0"

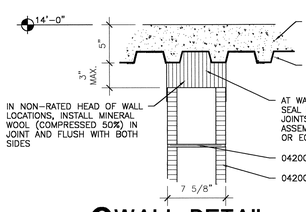

2 WALL DETAIL
SCALE: 1 1/2" = 1'-0"

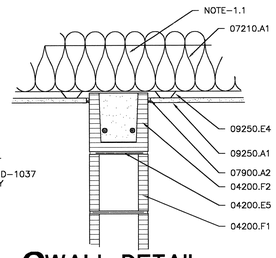

3 WALL DETAIL
SCALE: 1 1/2" = 1'-0"
NOTE: AT "B1" WALLS INSTALL FIRE CAULK IN LIEU OF THE 07900.A2 NOTED ABOVE

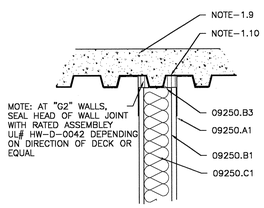

4 WALL DETAIL
SCALE: 1 1/2" = 1'-0"

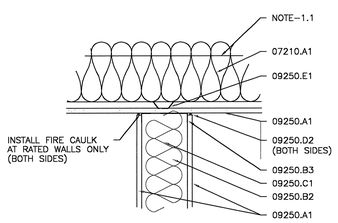

5 WALL DETAIL
SCALE: 1 1/2" = 1'-0"

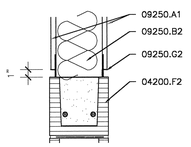

6 WALL DETAIL
SCALE: 1 1/2" = 1'-0"

MATERIAL KEYNOTES

04200.E5	LADDER TYPE HORIZONTAL REINFORCING @ 16" o.c. VERTICAL TYPICAL
04200.F1	8 X 8 X 16 CONCRETE MASONRY UNITS
04200.F2	CONCRETE MASONRY U-BLOCK CONCRETE FILLED WITH 2- #5 REBAR CONT.
04200.F3	4" X 8" X 16" CONCRETE MASONRY BLOCK
07210.A1	8" BATT. INSULATION
07900.A2	SEALANT
08410.B1	ALUMINUM STOREFRONT FRAMING (INTERIOR)
08800.A2	1/4" TEMPERED GLASS - INTERIOR GLAZING
09250.A1	5/8" GYPSUM BOARD
09250.B1	3-5/8" METAL STUDS
09250.B2	6" METAL STUDS
09250.B3	METAL STUD TRACK
09250.C1	SOUND ATTENUATION INSULATION - COMPLETELY FILL CAVITY
09250.D2	ACOUSTICAL SEALANT
09250.E1	1-1/2" METAL FURRING CHANNEL @ 16" O.C.
09250.E4	7/8" METAL FURRING CHANNEL @ 16" O.C.
09250.G2	EXTRUDED ALUMINUM DRYWALL REVEAL 1" - TYPE F" REVEAL
09300.A1	CERAMIC WALL TILE
NOTE-1.1	PRE-ENGINEERED ROOF TRUSS RE: STRUCTURAL
NOTE-1.10	STEEL DECKING RE: STRUCTURAL
NOTE-1.5	STEEL BEAM RE: STRUCTURAL
NOTE-1.9	CONCRETE SLAB RE: STRUCTURAL
NOTE-6	RE: FINISH SCHEDULE

GENERAL NOTES:

1. THE HEIGHT OF FURRING AROUND COLUMNS MUST MATCH THE SURROUNDING WALL CONDITIONS.
2. ALL GYPSUM BOARD BELOW 8'-0" A.F.F. SHALL BE HIGH IMPACT RESISTANT GYPSUM BOARD. (TYPICAL) RE: SPECIFICATION SECTION 09250.

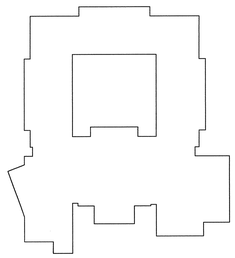

USE OF ARCHITECT'S DRAWINGS, SPECIFICATIONS AND OTHER DOCUMENTS

THE DRAWINGS, SPECIFICATIONS AND OTHER DOCUMENTS PREPARED BY THE ARCHITECT FOR THIS PROJECT ARE INSTRUMENTS OF THE ARCHITECT'S SERVICE FOR USE SOLELY WITH RESPECT TO THIS PROJECT AND, UNLESS OTHERWISE PROVIDED, THE ARCHITECT SHALL BE DEEMED THE AUTHOR OF THESE DOCUMENTS AND SHALL RETAIN ALL COMMON LAW, STATUTORY AND OTHER RESERVED RIGHTS, INCLUDING REPRODUCIBLE COPIES, OF THE ARCHITECT'S DRAWINGS, SPECIFICATIONS AND OTHER DOCUMENTS FOR INFORMATION AND REFERENCE IN CONNECTION WITH THE OWNER'S USE AND OCCUPANCY OF THE PROJECT. THE ARCHITECT'S DRAWINGS, SPECIFICATIONS OR OTHER DOCUMENTS SHALL NOT BE USED BY THE OWNER OR OTHERS ON OTHER PROJECTS, FOR ADDITIONS TO THIS PROJECT OR FOR COMPLETION OF THIS PROJECT BY OTHERS, UNLESS THE ARCHITECT IS ADJUDGED TO BE IN DEFAULT UNDER THIS AGREEMENT, EXCEPT BY AGREEMENT IN WRITING AND WITH APPROPRIATE COMPENSATION TO THE ARCHITECT.

NO.	DATE	REVISION/SUBMISSION
1	11/12/04	FIRE MARSHAL AND C.P. REVISIONS

McKINLEY MIDDLE MAGNET SCHOOL

1550 EDDIE ROBINSON SR. DRIVE
BATON ROUGE, LOUISIANA 70802

Robert M. Coleman & Partners Architects A.I.A.
3377 North Boulevard
Baton Rouge, Louisiana 70808
U.S.A.
tel 225.387.4414
fax 225.387.4693

WALL TYPES

PROJECT NO. 03048	SHEET NO.. A4.1
DRAWN BY CS, JM	
CHECKED BY JS	
DATE October 15, 2004	OF

1 DOOR TYPES
1/4" = 1' - 0"

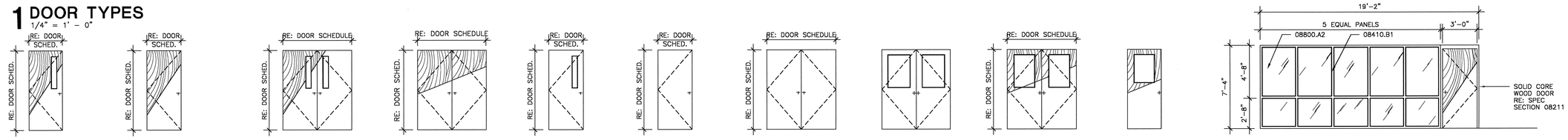

TYPE A
FLUSH PANEL SOLID CORE WOOD DOOR W/ NARROW LITE RE: SPECIFICATION SECTION 08211

TYPE B
FLUSH PANEL SOLID CORE WOOD DOOR RE: SPECIFICATION SECTION 08211

TYPE C
PAIR – FLUSH PANEL SOLID CORE WOOD DOORS W/ NARROW LITES RE: SPECIFICATION SECTION 08211

TYPE D
PAIR – FLUSH PANEL SOLID CORE WOOD DOORS RE: SPECIFICATION SECTION 08211

TYPE E
FLUSH PANEL STEEL DOOR W/ NARROW LITE RE: SPECIFICATION SECTION 08111

TYPE F
FLUSH PANEL STEEL DOOR RE: SPECIFICATION SECTION 08111

TYPE G
PAIR – FLUSH PANEL STEEL DOORS RE: SPECIFICATION SECTION 08111

TYPE H
PAIR – FLUSH PANEL STEEL DOORS W/ HALF VISION LITE RE: SPECIFICATION SECTION 08111

TYPE J
PAIR – FLUSH PANEL SOLID CORE WOOD DOORS W/ HALF VISION LITE RE: SPECIFICATION SECTION 08211

TYPE K
FLUSH PANEL SOLID CORE WOOD DOOR W/ HALF VISION LITE RE: SPECIFICATION SECTION 08211

TYPE L
FLUSH PANEL SOLID CORE WOOD DOOR IN INTERIOR ALUMINUM STOREFRONT SYSTEM

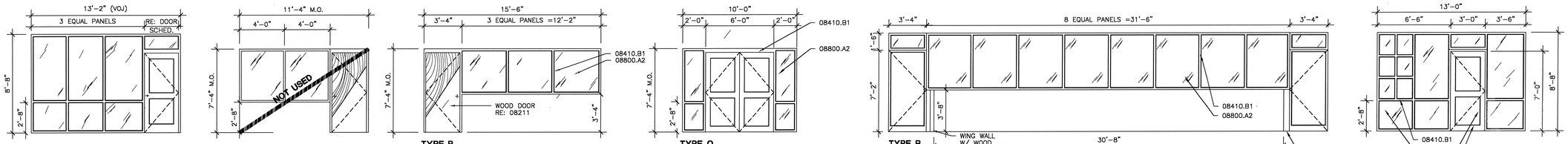

TYPE M
ALUMINUM DOOR IN ALUMINUM STOREFRONT SYSTEM

TYPE N
INTERIOR SOLID CORE WOOD DOOR/ IN ALUMINUM STOREFRONT SYSTEM

TYPE P
FLUSH PANEL SOLID CORE WOOD DOOR IN ALUMINUM STOREFRONT SYSTEM

TYPE Q
PAIR ALUMINUM STOREFRONT DOORS IN INTERIOR ALUMINUM STOREFRONT SYSTEM RE: SPECIFICATION SECTION 08410

TYPE R
ALUMINUM STOREFRONT DOORS

TYPE S
ALUMINUM STOREFRONT DOOR IN INTERIOR ALUMINUM STOREFRONT FRAMING

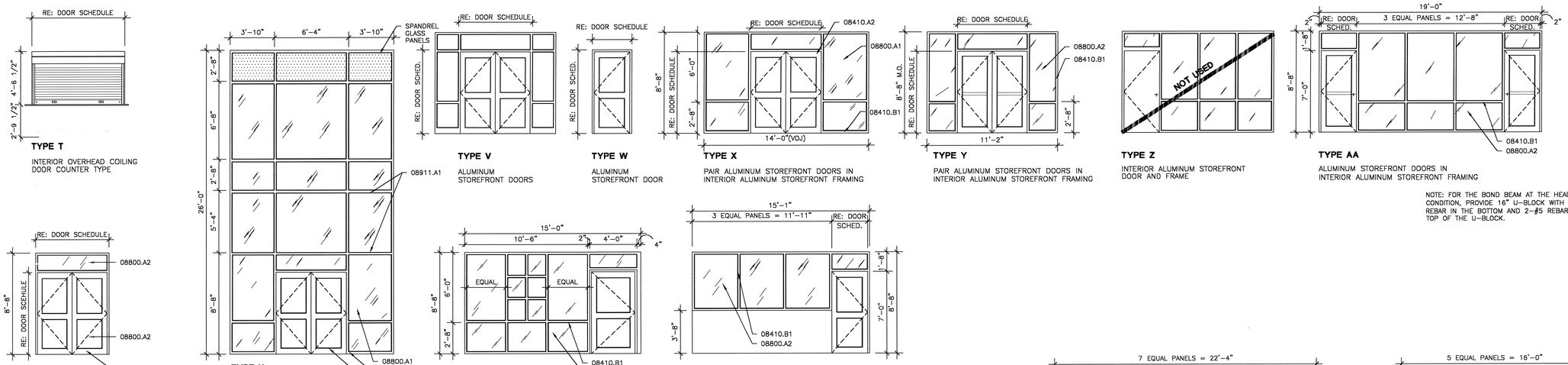

TYPE T
INTERIOR OVERHEAD COILING DOOR COUNTER TYPE

TYPE V
ALUMINUM STOREFRONT DOORS

TYPE W
ALUMINUM STOREFRONT DOOR

TYPE X
PAIR ALUMINUM STOREFRONT DOORS IN INTERIOR ALUMINUM STOREFRONT FRAMING

TYPE Y
PAIR ALUMINUM STOREFRONT DOORS IN INTERIOR ALUMINUM STOREFRONT FRAMING

TYPE Z
INTERIOR ALUMINUM STOREFRONT DOOR AND FRAME

TYPE AA
ALUMINUM STOREFRONT DOORS IN INTERIOR ALUMINUM STOREFRONT FRAMING

NOTE: FOR THE BOND BEAM AT THE HEAD CONDITION, PROVIDE 16" U-BLOCK WITH 2-#7 REBAR IN THE BOTTOM AND 2-#5 REBAR AT THE TOP OF THE U-BLOCK.

TYPE V1
PAIR ALUMINUM STOREFRONT DOORS AND TRANSOM ABOVE

TYPE U
EXTERIOR ALUMINUM STOREFRONT DOORS AND CURTAIN WALL SYSTEM

TYPE BB
ALUMINUM STOREFRONT DOOR IN INTERIOR STOREFRONT FRAMING

TYPE CC
ALUMINUM STOREFRONT DOOR IN INTERIOR ALUMINUM STOREFRONT FRAMING

WINDOW TYPES
1/4" = 1' - 0"

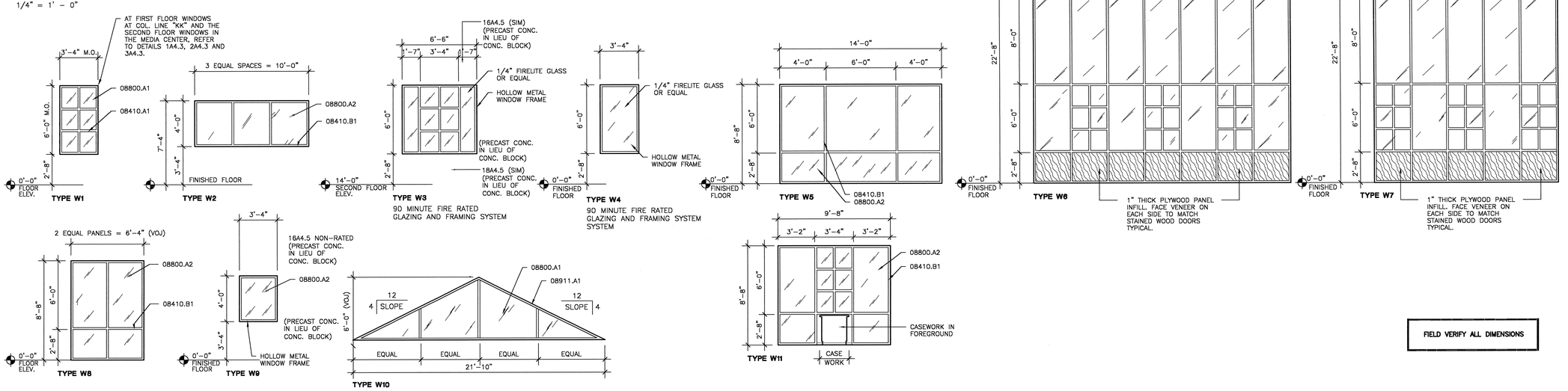

TYPE W1

TYPE W2

TYPE W3
90 MINUTE FIRE RATED GLAZING AND FRAMING SYSTEM

TYPE W4
90 MINUTE FIRE RATED GLAZING AND FRAMING SYSTEM SYSTEM

TYPE W5

TYPE W6
1" THICK PLYWOOD PANEL INFILL. FACE VENEER ON EACH SIDE TO MATCH STAINED WOOD DOORS TYPICAL.

TYPE W7
1" THICK PLYWOOD PANEL INFILL. FACE VENEER ON EACH SIDE TO MATCH STAINED WOOD DOORS TYPICAL.

TYPE W8

TYPE W9

TYPE W10

TYPE W11

FIELD VERIFY ALL DIMENSIONS

MATERIAL KEYNOTES

08410.A1	ALUMINUM STOREFRONT FRAMING (EXTERIOR WINDOWS)
08410.A2	ALUMINUM STOREFRONT ENTRANCE DOORS & FRAME (EXTERIOR)
08410.B1	ALUMINUM STOREFRONT FRAMING (INTERIOR)
08800.A1	1/4" TINTED AND HEAT TREATED FLOAT GLASS
08800.A2	1/4" TEMPERED GLASS – INTERIOR GLAZING
08911.A1	ALUMINUM CURTAIN WALLS

KEY PLAN

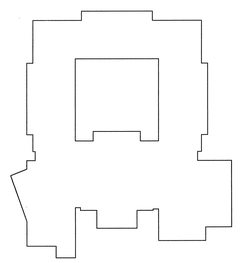

USE OF ARCHITECT'S DRAWINGS, SPECIFICATIONS AND OTHER DOCUMENTS

THE DRAWINGS, SPECIFICATIONS AND OTHER DOCUMENTS PREPARED BY THE ARCHITECT FOR THIS PROJECT ARE INSTRUMENTS OF THE ARCHITECT'S SERVICE FOR USE SOLELY WITH RESPECT TO THIS PROJECT AND, UNLESS OTHERWISE PROVIDED, THE ARCHITECT SHALL BE DEEMED THE AUTHOR OF THESE DOCUMENTS AND SHALL RETAIN ALL COMMON LAW, STATUTORY AND OTHER RESERVED RIGHTS, INCLUDING REPRODUCIBLE COPIES, OF THE ARCHITECT'S DRAWINGS, SPECIFICATIONS AND OTHER DOCUMENTS FOR INFORMATION AND REFERENCE IN CONNECTION WITH THE OWNER'S USE AND OCCUPANCY OF THE PROJECT. THE ARCHITECT'S DRAWINGS, SPECIFICATIONS OR OTHER DOCUMENTS SHALL NOT BE USED BY THE OWNER OR OTHERS ON OTHER PROJECTS, FOR ADDITIONS TO THIS PROJECT OR FOR COMPLETION OF THIS PROJECT BY OTHERS, UNLESS THE ARCHITECT IS ADJUDGED TO BE IN DEFAULT UNDER THIS AGREEMENT, EXCEPT BY AGREEMENT IN WRITING AND WITH APPROPRIATE COMPENSATION TO THE ARCHITECT.

NO.	DATE	REVISION/SUBMISSION
1	11/12/04	FIRE MARSHAL AND C.P. REVISIONS

McKINLEY MIDDLE MAGNET SCHOOL

1550 EDDIE ROBINSON SR. DRIVE
BATON ROUGE, LOUISIANA 70802

Robert M. Coleman & Partners Architects A.I.A.
3377 North Boulevard
Baton Rouge, Louisiana 70806
U.S.A.
tel 225.387.4414
fax 225.387.4693

DOOR TYPES/ WINDOW TYPES

PROJECT NO.	03048
DRAWN BY	BH
CHECKED BY	JS
DATE	October 15, 2004
SHEET NO..	A4.2
	OF

DOOR SCHEDULE

RE: SPEC SECTION 08710 FOR HARDWARE SETS

NUMBER	TYPE	MATL	SIZE	THICK	FINISH	RATING	HDW.	FRAME	FINISH	HEAD	JAMB	SILL	REMARKS
STAIRS – FIRST FLOOR													
ST1–1	F	STEEL	4'–0" X 7'–0"	1 3/4"	PAINTED	–	21	HM	PAINT	4A4.4	5A4.4	6A4.4	–
ST1–2	C	S.C. WD	PR. 4'–0" X 7'–0"	1 3/4"	STAINED	60 MIN.	29	HM	PAINT	1A4.4	2A4.4	3A4.4	ON HOLD OPEN DEVICE
ST2–1	V1	ALUM. STOREFRONT	PR. 3'–0" X 7'–0"	1 3/4"	ANODIZ.	–	33	ALUM.	ANODIZ.	10A4.4	11A4.4	12A4.4	–
ST2–2	C	S.C. WD	PR. 3'–0" X 7'–0"	1 3/4"	STAINED	60 MIN.	29	HM	PAINT	1A4.4	2A4.4	3A4.4	ON HOLD OPEN DEVICE
ST3–1	V1	ALUM. STOREFRONT	PR. 3'–0" X 7'–0"	1 3/4"	ANODIZ.	–	33	ALUM.	PAINT	10A4.4	11A4.4	12A4.4	–
ST3–2	C	S.C. WD	PR. 3'–0" X 7'–0"	1 3/4"	STAINED	60 MIN.	29	HM	PAINT	1A4.4	2A4.4	3A4.4	ON HOLD OPEN DEVICE
ST4–1	F	STEEL	4'–0" X 7'–0"	1 3/4"	PAINTED	–	21	HM	PAINT	4A4.4	5A4.4	6A4.4	–
ST4–2	C	S.C. WD	PR. 4'–0" X 7'–0"	1 3/4"	STAINED	60 MIN.	29	HM	PAINT	1A4.4	2A4.4	3A4.4	ON HOLD OPEN DEVICE
CORRIDORS – FIRST FLOOR													
002–1	A	S.C. WD	3'–0" X 7'–0"	1 3/4"	STAINED	–	4	HM	PAINT	7A4.4	8A4.4	9A4.4	–
002–2	A	S.C. WD	3'–0" X 7'–0"	1 3/4"	STAINED	90 MIN.	4	HM	PAINT	1A4.4 SIM	2A4.4 SIM	3A4.4 SIM	OVERALL FRAME DEPTH = 11 5/8"
003–1	B	S.C. WD	3'–0" X 7'–0"	1 3/4"	STAINED	–	4	HM	PAINT	13A4.4	14A4.4	15A4.4	–
004–1	J	S.C. WD	PR. 3'–0" X 7'–0"	1 3/4"	STAINED	–	12	HM	PAINT	1A4.4	2A4.4	3A4.4	–
006–1	Q	ALUM. STOREFRONT	PR. 3'–0" X 7'–0"	1 3/4"	ANODIZ.	–	33	ALUM.	ANODIZ.	13A4.5	14A4.5	–	–
006–2	G	STEEL	PR. 3'–10" X 7'–0"	1 3/4"	PAINTED	90 MIN.	25	HM	PAINT	1A4.4	2A4.4	3A4.4	ON HOLD OPEN DEVICE
006–3	J	S.C. WD	PR. 3'–0" X 7'–0"	1 3/4"	STAINED	–	12	HM	PAINT	1A4.4	2A4.4	3A4.4	–
008–1	V1	ALUM. STOREFRONT	PR. 3'–0" X 7'–0"	1 3/4"	ANODIZ.	–	33	ALUM.	ANODIZ.	10A4.4	11A4.4	12A4.4	–
011–1	V1	ALUM. STOREFRONT	PR. 3'–0" X 7'–0"	1 3/4"	ANODIZ.	–	33	ALUM.	ANODIZ.	10A4.4	11A4.4	12A4.4	–
012–1	X	ALUM. STOREFRONT	PR. 3'–0" X 7'–0"	1 3/4"	ANODIZ.	–	24	ALUM.	ANODIZ.	–	–	–	–
ADMINISTRATION													
100–1	U	ALUM. STOREFRONT	PR. 3'–0" X 7'–0"	1 3/4"	ANODIZ.	–	33	ALUM.	ANODIZ.	–	–	–	–
101–1	S	ALUM. STOREFRONT	3'–0" X 7'–0"	1 3/4"	ANODIZ.	–	23	ALUM.	ANODIZ.	–	–	–	–
102–1	A	S.C. WD	3'–0" X 7'–0"	1 3/4"	STAINED	–	7	HM	PAINT	7A4.4	8A4.4	9A4.4	–
103–1	B	S.C. WD	3'–0" X 7'–0"	1 3/4"	STAINED	–	4	HM	PAINT	7A4.4	8A4.4	9A4.4	–
104–1	B	S.C. WD	3'–0" X 7'–0"	1 3/4"	STAINED	–	4	HM	PAINT	7A4.4	8A4.4	9A4.4	–
105–1	B	S.C. WD	3'–0" X 7'–0"	1 3/4"	STAINED	45 MIN.	4	HM	PAINT	7A4.4	8A4.4	9A4.4	–
106–1	A	S.C. WD	3'–0" X 7'–0"	1 3/4"	STAINED	–	7	HM	PAINT	7A4.4	8A4.4	9A4.4	–
107–1	L	S.C. WD	3'–0" X 7'–0"	1 3/4"	STAINED	–	11	ALUM.	ANODIZ.	–	–	–	–
107–2	B	S.C. WD	3'–0" X 7'–0"	1 3/4"	STAINED	–	11	ALUM.	ANODIZ.	16A4.4	17A4.4	–	–
108–1	A	S.C. WD	3'–0" X 7'–0"	1 3/4"	STAINED	–	7	HM	PAINT	7A4.4	8A4.4	9A4.4	–
109–1	B	S.C. WD	3'–0" X 7'–0"	1 3/4"	STAINED	–	7	HM	PAINT	7A4.4	8A4.4	9A4.4	–
110–1	B	S.C. WD	3'–0" X 7'–0"	1 3/4"	STAINED	–	8	HM	PAINT	7A4.4	8A4.4	9A4.4	–
111–1	D	S.C. WD	PR. 3'–0" X 7'–0"	1 3/4"	STAINED	–	26	HM	PAINT	7A4.4	8A4.4	9A4.4	–
112–1	A	S.C. WD	3'–0" X 7'–0"	1 3/4"	STAINED	–	7	HM	PAINT	7A4.4	8A4.4	9A4.4	–
113–1	B	S.C. WD	3'–0" X 7'–0"	1 3/4"	STAINED	–	7	HM	PAINT	7A4.4	8A4.4	9A4.4	–
114–1	A	S.C. WD	3'–0" X 7'–0"	1 3/4"	STAINED	–	7	HM	PAINT	7A4.4	8A4.4	9A4.4	–
116–1	A	S.C. WD	3'–0" X 7'–0"	1 3/4"	STAINED	–	7	HM	PAINT	7A4.4	8A4.4	9A4.4	–
117–1	A	S.C. WD	3'–0" X 7'–0"	1 3/4"	STAINED	–	11	HM	PAINT	7A4.4	8A4.4	9A4.4	–
118–1	A	S.C. WD	3'–0" X 7'–0"	1 3/4"	STAINED	–	7	HM	PAINT	7A4.4	8A4.4	9A4.4	–
119–1	B	S.C. WD	3'–0" X 7'–0"	1 3/4"	STAINED	–	5	HM	PAINT	7A4.4	8A4.4	9A4.4	–
120–1	A	S.C. WD	3'–0" X 7'–0"	1 3/4"	STAINED	–	7	HM	PAINT	7A4.4	8A4.4	9A4.4	–
121–1	B	S.C. WD	3'–0" X 7'–0"	1 3/4"	STAINED	–	5	HM	PAINT	7A4.4	8A4.4	9A4.4	–
122–1	A	S.C. WD	3'–0" X 7'–0"	1 3/4"	STAINED	–	11	HM	PAINT	7A4.4	8A4.4	9A4.4	–
123–1	B	S.C. WD	3'–0" X 7'–0"	1 3/4"	STAINED	–	7	HM	PAINT	7A4.4	8A4.4	9A4.4	–
123–2	B	S.C. WD	3'–0" X 7'–0"	1 3/4"	STAINED	–	9	HM	PAINT	13A4.4	14A4.4	15A4.4	–
124–1	B	S.C. WD	3'–0" X 7'–0"	1 3/4"	STAINED	–	8	HM	PAINT	7A4.4	8A4.4	9A4.4	–
125–1	S	ALUM. STOREFRONT	3'–0" X 7'–0"	1 3/4"	ANODIZ.	–	23	ALUM.	ANODIZ.	–	–	–	–
126–1	A	S.C. WD	3'–0" X 7'–0"	1 3/4"	STAINED	–	7	HM	PAINT	7A4.4	8A4.4	9A4.4	–
128–1	A	S.C. WD	3'–0" X 7'–0"	1 3/4"	STAINED	–	7	HM	PAINT	7A4.4	8A4.4	9A4.4	–
130–1	C	S.C. WD	PR. 3'–0" X 7'–0"	1 3/4"	STAINED	90 MIN.	14	HM	PAINT	1A4.4	2A4.4	3A4.4	–
130–2	E	STEEL	4'–0" X 7'–0"	1 3/4"	PAINTED	–	20	HM	PAINT	4A4.4	5A4.4	6A4.4	–
131–1	B	S.C. WD	3'–0" X 7'–0"	1 3/4"	STAINED	–	1	HM	PAINT	1A4.4	2A4.4	3A4.4	–
132–1	B	S.C. WD	3'–0" X 7'–0"	1 3/4"	STAINED	45 MIN.	2	HM	PAINT	1A4.4	2A4.4	3A4.4	–
132–2	B	S.C. WD	3'–0" X 7'–0"	1 3/4"	STAINED	90 MIN.	2	HM	PAINT	1A4.4	2A4.4	3A4.4	–
133–1	A	S.C. WD	3'–0" X 7'–0"	1 3/4"	STAINED	–	1	HM	PAINT	1A4.4	2A4.4	3A4.4	–
133–2	A	S.C. WD	3'–0" X 7'–0"	1 3/4"	STAINED	–	1	HM	PAINT	1A4.4	2A4.4	3A4.4	–
133–3	E	STEEL	4'–0" X 7'–0"	1 3/4"	PAINTED	–	20	HM	PAINT	4A4.4	5A4.4	6A4.4	–
135–1	B	S.C. WD	3'–0" X 7'–0"	1 3/4"	STAINED	45 MIN.	3	HM	PAINT	1A4.4	2A4.4	3A4.4	–
136–1	B	S.C. WD	3'–0" X 7'–0"	1 3/4"	STAINED	–	3	HM	PAINT	1A4.4	2A4.4	3A4.4	–

DOOR SCHEDULE

RE: SPEC SECTION 08710 FOR HARDWARE SETS

NUMBER	TYPE	MATL	SIZE	THICK	FINISH	RATING	HDW.	FRAME	FINISH	HEAD	JAMB	SILL	REMARKS
KITCHEN													
200–1	B	S.C. WD.	3'–0" X 7'–0"	1 3/4"	STAINED	45 MIN.	3	HM	PAINT	1A4.4	2A4.4	3A4.4	–
201–1	B	S.C. WD.	3'–0" X 7'–0"	1 3/4"	STAINED	45 MIN.	3	HM	PAINT	1A4.4	2A4.4	3A4.4	–
202–1	B	S.C. WD	3'–0" X 7'–0"	1 3/4"	STAINED	–	3	HM	PAINT	1A4.4	2A4.4	3A4.4	–
203–1	B	S.C. WD	3'–0" X 7'–0"	1 3/4"	STAINED	–	3	HM	PAINT	1A4.4	2A4.4	3A4.4	–
204–1	B	S.C. WD	4'–0" X 7'–0"	1 3/4"	STAINED	45 MIN.	3	HM	PAINT	1A4.4	2A4.4	3A4.4	–
205–1	B	S.C. WD	3'–0" X 7'–0"	1 3/4"	STAINED	–	8	HM	PAINT	1A4.4	2A4.4	3A4.4	–
206–1	A	S.C. WD	3'–0" X 7'–0"	1 3/4"	STAINED	–	9	HM	PAINT	1A4.4	2A4.4	3A4.4	–
207–1	B	S.C. WD	3'–0" X 7'–0"	1 3/4"	STAINED	–	3	HM	PAINT	1A4.4	2A4.4	3A4.4	–
208–1	G	STEEL	PR. 4'–0" X 7'–0"	1 3/4"	PAINTED	–	17	HM	PAINT	4A4.4	5A4.4	6A4.4	–
208–2	E	STEEL	4'–0" X 7'–0"	1 3/4"	PAINTED	–	4	HM	PAINT	1A4.4	2A4.4	3A4.4	–
208–3	G	STEEL	PR. 3'–0" X 7'–0"	1 3/4"	PAINTED	–	25A	HM	PAINT	1A4.4	2A4.4	3A4.4	–
209–1	B	S.C. WD	3'–0" X 7'–0"	1 3/4"	STAINED	45 MIN.	4	HM	PAINT	1A4.4	2A4.4	3A4.4	–
210–1	B	S.C. WD	3'–0" X 7'–0"	1 3/4"	STAINED	–	7	HM	PAINT	1A4.4	2A4.4	3A4.4	–
211–1	B	S.C. WD	3'–0" X 7'–0"	1 3/4"	STAINED	–	10	HM	PAINT	1A4.4	2A4.4	3A4.4	–
212–1	B	S.C. WD	3'–0" X 7'–0"	1 3/4"	STAINED	–	10	HM	PAINT	1A4.4	2A4.4	3A4.4	–
213–1	B	S.C. WD	3'–0" X 7'–0"	1 3/4"	STAINED	–	10	HM	PAINT	1A4.4	2A4.4	3A4.4	–
214–1	P	S.C. WD	3'–0" X 7'–0"	1 3/4"	STAINED	–	7	ALUM.	ANODIZ.	13A4.5	14A4.5	15A4.5	–
215–1	B	S.C. WD	3'–0" X 7'–0"	1 3/4"	STAINED	–	8	HM	PAINT	1A4.4	2A4.4	3A4.4	–
216–1	AA	S.C. WD	3'–0" X 7'–0"	1 3/4"	ANODIZ.	–	13	ALUM.	ANODIZ.	13A4.5	14A4.5	23A4.5	–
216–2	AA	S.C. WD	3'–0" X 7'–0"	1 3/4"	ANODIZ.	–	13	ALUM.	ANODIZ.	13A4.5	14A4.5	23A4.5	–
216–3	AA	S.C. WD	3'–0" X 7'–0"	1 3/4"	ANODIZ.	–	13	ALUM.	ANODIZ.	13A4.5	14A4.5	23A4.5	–
216–4	AA	S.C. WD	3'–0" X 7'–0"	1 3/4"	ANODIZ.	–	13	ALUM.	ANODIZ.	13A4.5	14A4.5	23A4.5	–
216–5	T	STAINLESS STEEL	4'–0" X 4'–0"	1 3/4"	S/S	–	16	–	–	–	–	–	OVERHEAD COIL – RE FS DWGS.
218–1	V1	ALUM. STOREFRONT	PR. 3'–0" X 7'–0"	1 3/4"	ANODIZ.	–	33	ALUM.	ANODIZ.	10A4.4	11A4.4	12A4.4	–
218–2	V1	ALUM. STOREFRONT	PR. 3'–0" X 7'–0"	1 3/4"	ANODIZ.	–	33	ALUM.	ANODIZ.	10A4.4	11A4.4	12A4.4	–
218–3	E	STEEL	3'–0" X 7'–0"	1 3/4"	PAINTED	–	21	HM	PAINT	4A4.4	5A4.4	6A4.4	–
219–1	B	S.C. WD	3'–0" X 7'–0"	1 3/4"	STAINED	–	3	HM	PAINT	1A4.4	2A4.4	3A4.4	–
GYMNASIUM													
300–1	A	S.C. WD	3'–0" X 7'–0"	1 3/4"	STAINED	90 MIN.	2	HM	PAINT	7A4.5	8A4.5	PROVIDE THRESHOLD AT FLOOR TRANSITION	
300–2	C	S.C. WD	PR. 3'–0" X 7'–0"	1 3/4"	STAINED	90 MIN.	38	HM	PAINT	7A4.5	8A4.5	9A4.5	EXIT HDW. TIED TO FIRE ALARM
300–3	H	STEEL	PR. 3'–0" X 7'–0"	1 3/4"	STAINED	–	12	HM	PAINT	7A4.5	8A4.5	9A4.5	–
300–4	F	STEEL	3'–0" X 7'–0"	1 3/4"	PAINTED	90 MIN.	36	HM	PAINT	4A4.5	5A4.5	6A4.5	–
301–1	F	STEEL	3'–0" X 7'–0"	1 3/4"	STAINED	45 MIN.	4	HM	PAINT	7A4.5	8A4.4	PROVIDE THRESHOLD AT FLOOR TRANSITION	
301–2	F	STEEL	3'–0" X 6'–8"	1 3/4"	PAINTED	45 MIN.	3	HM	PAINT	7A4.4	8A4.4	PROVIDE SILL FRAME TO MATCH HEAD – 4 SIDED FRAME	
302–1	E	STEEL	3'–0" X 7'–0"	1 3/4"	PAINTED	–	1	HM	PAINT	7A4.5	8A4.5	9A4.5	–
303–1	F	STEEL	3'–0" X 7'–0"	1 3/4"	PAINTED	–	27	HM	PAINT	1A4.4	2A4.4	3A4.4	–
303–2	F	STEEL	3'–0" X 7'–0"	1 3/4"	PAINTED	–	21	HM	PAINT	4A4.4	5A4.4	6A4.4	–
304–1	F	STEEL	3'–0" X 7'–0"	1 3/4"	PAINTED	–	27	HM	PAINT	1A4.4	2A4.4	3A4.4	–
305–1	F	STEEL	3'–0" X 7'–0"	1 3/4"	PAINTED	–	34	HM	PAINT	7A4.5	8A4.5	PROVIDE THRESHOLD AT FLOOR TRANSITION	
306–1	E	STEEL	3'–0" X 7'–0"	1 3/4"	PAINTED	–	7	HM	PAINT	7A4.5	8A4.5	PROVIDE THRESHOLD AT FLOOR TRANSITION	
307–1	E	STEEL	3'–0" X 7'–0"	1 3/4"	PAINTED	–	7	HM	PAINT	7A4.5	8A4.5	PROVIDE THRESHOLD AT FLOOR TRANSITION	
308–1	F	STEEL	3'–0" X 7'–0"	1 3/4"	PAINTED	–	34	HM	PAINT	7A4.5	8A4.5	PROVIDE THRESHOLD AT FLOOR TRANSITION	
309–1	F	STEEL	3'–0" X 7'–0"	1 3/4"	PAINTED	–	27	HM	PAINT	1A4.4	2A4.4	3A4.4	–
310–1	F	STEEL	3'–0" X 7'–0"	1 3/4"	PAINTED	–	27	HM	PAINT	1A4.4	2A4.4	3A4.4	–
310–2	F	STEEL	3'–0" X 7'–0"	1 3/4"	PAINTED	–	21	HM	PAINT	4A4.4	5A4.4	6A4.4	–
311–1	V	ALUM. STOREFRONT	PR. 3'–0" X 7'–0"	1 3/4"	ANODIZ.	–	33	ALUM.	ANODIZ.	10A4.4	11A4.4	12A4.5	RE: INT. ELEV. FOR SIDELIGHT
312–1	T	STEEL	9'–8" X 4'–6"	–	PAINTED	–	–	–	–	19A4.4	20A4.4	21A4.4	–
312–2	F	STEEL	3'–0" X 7'–0"	1 3/4"	PAINTED	–	4	HM	PAINT	1A4.4	2A4.4	3A4.4	–
313–1	F	STEEL	3'–0" X 7'–0"	1 3/4"	PAINTED		3	HM	PAINT	1A4.4	2A4.4	3A4.4	–
314–1	F	STEEL	3'–0" X 7'–0"	1 3/4"	PAINTED	45 MIN.	4	HM	PAINT	7A4.5	8A4.5	PROVIDE THRESHOLD AT FLOOR TRANSITION	
315–1	F	STEEL	3'–0" X 7'–0"	1 3/4"	PAINTED	45 MIN.	9	HM	PAINT	1A4.4	2A4.4	3A4.4	–
316–1	F	STEEL	3'–0" X 7'–0"	1 3/4"	PAINTED	45 MIN.	4	HM	PAINT	7A4.5	8A4.5	PROVIDE THRESHOLD AT FLOOR TRANSITION	
317–1	E	STEEL	3'–0" X 7'–0"	1 3/4"	PAINTED	–	7	HM	PAINT	7A4.5	8A4.5	PROVIDE THRESHOLD AT FLOOR TRANSITION	

DOOR SCHEDULE

RE: SPEC SECTION 08710 FOR HARDWARE SETS

NUMBER	TYPE	MATL	SIZE	THICK	FINISH	RATING	HDW.	FRAME	FINISH	HEAD	JAMB	SILL	REMARKS
FINE ARTS													
400–1	A	S.C. WD	3'–0" X 7'–0"	1 3/4"	STAINED	–	19	HM	PAINT	1A4.4	2A4.4	3A4.4	–
401–1	C	S.C. WD	PR. 3'–0" X 7'–0"	1 3/4"	STAINED	–	15	HM	PAINT	1A4.4	2A4.4	3A4.4	–
402–1	B	S.C. WD	3'–0" X 7'–0"	1 3/4"	STAINED	45 MIN.	4	HM	PAINT	1A4.4	2A4.4	3A4.4	–
403–1	K	S.C. WD	3'–0" X 7'–0"	1 3/4"	STAINED	–	32	HM	PAINT	1A4.4	2A4.4	3A4.4	–
404–1	B	S.C. WD	3'–0" X 7'–0"	1 3/4"	STAINED	–	31	HM	PAINT	1A4.4	2A4.4	3A4.4	–
405–1	C	S.C. WD	PR. 3'–0" X 7'–0"	1 3/4"	STAINED	–	15	HM	PAINT	1A4.4	2A4.4	3A4.4	–
405–2	A	S.C. WD	3'–0" X 7'–0"	1 3/4"	STAINED	–	19	HM	PAINT	1A4.4	2A4.4	3A4.4	–
406–1	A	S.C. WD	3'–0" X 7'–0"	1 3/4"	STAINED	45 MIN.	3	HM	PAINT	1A4.4	2A4.4	3A4.4	–
406–2	A	S.C. WD	3'–0" X 7'–0"	1 3/4"	STAINED	45 MIN.	2	HM	PAINT	1A4.4	2A4.4	3A4.4	–
407–1	F	STEEL	4'–0" X 7'–0"	1 3/4"	PAINTED	–	21	HM	PAINT	4A4.4	5A4.4	6A4.4	–
407–2	A	S.C. WD	3'–0" X 7'–0"	1 3/4"	STAINED	–	19	HM	PAINT	1A4.4	2A4.4	3A4.4	–
408–1	K	S.C. WD	4'–0" X 7'–0"	1 3/4"	STAINED	–	32	HM	PAINT	1A4.4	2A4.4	3A4.4	–
409–1	B	S.C. WD	4'–0" X 7'–0"	1 3/4"	STAINED	45 MIN.	4	HM	PAINT	1A4.4	2A4.4	3A4.4	–
410–1	B	S.C. WD	4'–0" X 7'–0"	1 3/4"	STAINED	45 MIN.	4	HM	PAINT	1A4.4	2A4.4	3A4.4	–
411–1	A	S.C. WD	3'–0" X 7'–0"	1 3/4"	STAINED	–	7	HM	PAINT	1A4.4	2A4.4	3A4.4	–
412–1	B	S.C. WD	3'–0" X 7'–0"	1 3/4"	STAINED	–	7	HM	PAINT	1A4.4	2A4.4	3A4.4	–
413–1	A	S.C. WD	3'–0" X 7'–0"	1 3/4"	STAINED	–	19	HM	PAINT	1A4.4	2A4.4	3A4.4	–
413–2	A	S.C. WD	3'–0" X 7'–0"	1 3/4"	STAINED	–	19	HM	PAINT	1A4.4	2A4.4	3A4.4	–
414–1	A	S.C. WD	3'–0" X 7'–0"	1 3/4"	STAINED	–	4	HM	PAINT	1A4.4	2A4.4	3A4.4	–
415–1	B	S.C. WD	3'–0" X 7'–0"	1 3/4"	STAINED	–	5	HM	PAINT	1A4.4	2A4.4	3A4.4	–
416–1	B	S.C. WD	3'–0" X 7'–0"	1 3/4"	STAINED	–	5	HM	PAINT	1A4.4	2A4.4	3A4.4	–
417–1	B	S.C. WD	3'–0" X 7'–0"	1 3/4"	STAINED	–	5	HM	PAINT	1A4.4	2A4.4	3A4.4	–
419–1	A	S.C. WD	3'–0" X 7'–0"	1 3/4"	STAINED	–	1	HM	PAINT	1A4.4	2A4.4	3A4.4	–
419–2	E	STEEL	3'–0" X 7'–0"	1 3/4"	PAINTED	–	20	HM	PAINT	4A4.4	5A4.4	6A4.4	–
420–1	A	S.C. WD	3'–0" X 7'–0"	1 3/4"	STAINED	–	1	HM	PAINT	1A4.4	2A4.4	3A4.4	–
420–2	E	STEEL	3'–0" X 7'–0"	1 3/4"	PAINTED	–	20	HM	PAINT	4A4.4	5A4.4	6A4.4	–
421–1	G	STEEL	PR. 3'–0" X 7'–0"	1 3/4"	PAINTED	–	18	HM	PAINT	4A4.4	5A4.4	6A4.4	–
422–1	G	STEEL	PR. 3'–0" X 7'–0"	1 3/4"	PAINTED	–	18	HM	PAINT	4A4.4	5A4.4	6A4.4	–
423–1	F	STEEL	4'–0" X 7'–0"	1 3/4"	PAINTED	45 MIN.	3	HM	PAINT	1A4.4	2A4.4	3A4.4	–
AUDITORIUM – FIRST FLOOR													
500–1	D	S.C. WD	PR. 3'–0" X 7'–0"	1 3/4"	STAINED	90 MIN.	14	HM	PAINT	4A4.4 SIM	5A4.4 SIM	–	
500–2	S	S.C. WD	3'–0" X 7'–0"	1 3/4"	STAINED	90 MIN.	28	HM	PAINT	4A4.4 SIM	5A4.4 SIM	–	
500–3	B	S.C. WD	3'–0" X 7'–0"	1 3/4"	STAINED	90 MIN.	28	HM	PAINT	4A4.4 SIM	5A4.4 SIM	–	
501–1	B	S.C. WD	3'–0" X 7'–0"	1 3/4"	STAINED	90 MIN.	4	HM	PAINT	7A4.5	8A4.5	9A4.5	
501–2	T	STEEL	8'–0" X 4'–6"	–	PAINTED	90 MIN.	16	–	PAINT	19A4.5	20A4.5	21A4.5	90 MIN. WITH FUSIBLE LINK
502–1	B	S.C. WD	4'–0" X 7'–0"	1 3/4"	STAINED	90 MIN.	2	HM	PAINT	7A4.5	8A4.5	9A4.5	
502–2	B	S.C. WD	3'–0" X 7'–0"	1 3/4"	STAINED	90 MIN.	28	HM	PAINT	7A4.5	8A4.5	9A4.5	
502–3	F	STEEL	3'–0" X 7'–0"	1 3/4"	PAINTED	–	21	HM	PAINT	1A4.5	2A4.5	3A4.5	–
502–4	F	STEEL	3'–0" X 7'–0"	1 3/4"	PAINTED	–	21	HM	PAINT	4A4.5 SIM	5A4.5 SIM	6A4.5 SIM	OVERALL FRAME DEPTH = 14"
503–1	G	STEEL	PR. 3'–0" X 7'–0"	1 3/4"	PAINTED	–	6	HM	PAINT	4A4.5	5A4.5	6A4.5	–
504–1	F	STEEL	3'–0" X 7'–0"	1 3/4"	PAINTED	45 MIN.	4	HM	PAINT	1A4.4	2A4.4	3A4.4	–
505–1	F	STEEL	3'–0" X 7'–0"	1 3/4"	PAINTED	45 MIN.	4	HM	PAINT	1A4.4	2A4.4	3A4.4	–
506–1	G	STEEL	PR. 4'–0" X 7'–0"	1 3/4"	PAINTED	45 MIN.	30	HM	PAINT	7A4.5	8A4.5	9A4.5	–
506–2	G	STEEL	PR. 4'–0" X 7'–0"	1 3/4"	PAINTED	–	18	HM	PAINT	4A4.4	5A4.4	6A4.4	–
SIXTH GRADE WING													
600–1	U	ALUM. STOREFRONT	PR. 3'–0" X 7'–0"	1 3/4"	ANODIZ.	–	33	ALUM.	ANODIZ.	–	–	–	–
603–1	B	S.C. WD	3'–0" X 7'–0"	1 3/4"	STAINED	45 MIN.	3	HM	PAINT	1A4.4	2A4.4	3A4.4	–
603–1	B	S.C. WD	3'–0" X 7'–0"	1 3/4"	STAINED	–	5	HM	PAINT	1A4.4	2A4.4	3A4.4	–
604–1	A	S.C. WD	3'–0" X 7'–0"	1 3/4"	STAINED	–	4	HM	PAINT	1A4.4	2A4.4	3A4.4	–
605–1	A	S.C. WD	3'–0" X 7'–0"	1 3/4"	STAINED	–	4	HM	PAINT	1A4.4	2A4.4	3A4.4	–
607–1	A	S.C. WD	3'–0" X 7'–0"	1 3/4"	STAINED	–	1	HM	PAINT	1A4.4	2A4.4	3A4.4	–
608–1	A	S.C. WD	3'–0" X 7'–0"	1 3/4"	STAINED	–	1	HM	PAINT	1A4.4	2A4.4	3A4.4	–
609–1	A	S.C. WD	3'–0" X 7'–0"	1 3/4"	STAINED	–	1	HM	PAINT	1A4.4	2A4.4	3A4.4	–
610–1	A	S.C. WD	3'–0" X 7'–0"	1 3/4"	STAINED	–	1	HM	PAINT	1A4.4	2A4.4	3A4.4	–
611–1	A	S.C. WD	3'–0" X 7'–0"	1 3/4"	STAINED	–	1	HM	PAINT	1A4.4	2A4.4	3A4.4	–
612–1	A	S.C. WD	3'–0" X 7'–0"	1 3/4"	STAINED	–	1	HM	PAINT	1A4.4	2A4.4	3A4.4	–
613–1	A	S.C. WD	3'–0" X 7'–0"	1 3/4"	STAINED	–	1	HM	PAINT	1A4.4	2A4.4	3A4.4	–
614–1	A	S.C. WD	3'–0" X 7'–0"	1 3/4"	STAINED	–	1	HM	PAINT	1A4.4	2A4.4	3A4.4	–
616–1	B	S.C. WD	3'–0" X 7'–0"	1 3/4"	STAINED	45 MIN.	3	HM	PAINT	1A4.4	2A4.4	3A4.4	–
617–1	A	S.C. WD	3'–0" X 7'–0"	1 3/4"	STAINED	–	1	HM	PAINT	1A4.4	2A4.4	3A4.4	–
618–1	A	S.C. WD	3'–0" X 7'–0"	1 3/4"	STAINED	45 MIN.	2	HM	PAINT	1A4.4	2A4.4	3A4.4	–
618–2	A	S.C. WD	3'–0" X 7'–0"	1 3/4"	STAINED	45 MIN.	2	HM	PAINT	1A4.4	2A4.4	3A4.4	–
619–1	A	S.C. WD	3'–0" X 7'–0"	1 3/4"	STAINED	–	1	HM	PAINT	1A4.4	2A4.4	3A4.4	–
620–1	B	S.C. WD	3'–0" X 7'–0"	1 3/4"	STAINED	–	3	HM	PAINT	1A4.4	2A4.4	3A4.4	–
621–1	B	S.C. WD	3'–0" X 7'–0"	1 3/4"	STAINED	–	3	HM	PAINT	1A4.4	2A4.4	3A4.4	–

DOOR SCHEDULE

RE: SPEC SECTION 08710 FOR HARDWARE SETS

| NUMBER | TYPE | MATL | SIZE | THICK | FINISH | RATING | HDW. | FRAME |

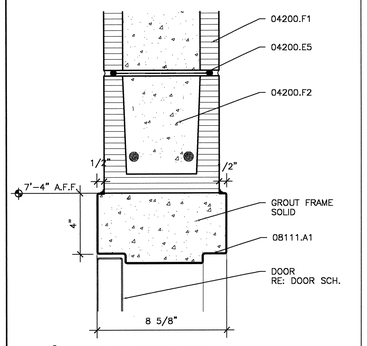

1 HEAD DETAIL
SCALE: 3" = 1'-0"

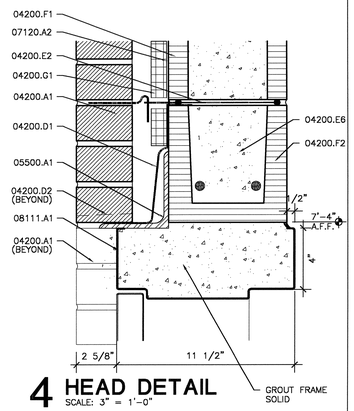

4 HEAD DETAIL
SCALE: 3" = 1'-0"

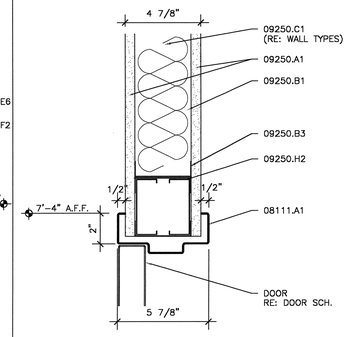

7 HEAD DETAIL
SCALE: 3" = 1'-0"

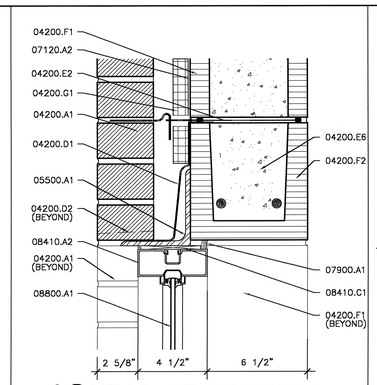

10 HEAD AT TRANSOM
SCALE: 3" = 1'-0"

REFER TO EXTERIOR ELEVATIONS FOR LOCATION OF SOLDIER COURSE AND ACCENT BRICK.

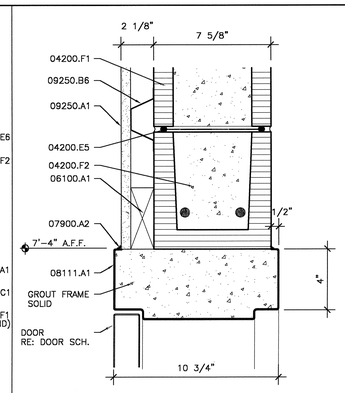

13 HEAD DETAIL
SCALE: 3" = 1'-0"

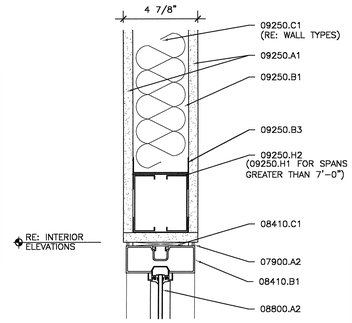

16 HEAD AT TRANSOM
SCALE: 3" = 1'-0"

MATERIAL KEYNOTES

04200.A1	4" VENEER FACE BRICK RE: ELEVATIONS AND DETAILS FOR LOCATIONS OF ACCENT COLORS OF BRICK
04200.D1	COPPER FABRIC THRU-WALL FLASHING
04200.D2	WEEP HOLES @ 24" O.C. – OPEN HEAD JOINT TYP.
04200.E2	TWO PIECE LADDER TYPE HORIZONTAL REINFORCING WITH ADJUSTABLE EYE AND WIRE TIE
04200.E5	LADDER TYPE HORIZONTAL REINFORCING @ 16" o.c. VERTICAL TYPICAL
04200.E6	FILL CORE W/ CONCRETE AND #5 VERTICAL
04200.F1	8 X 8 X 16 CONCRETE MASONRY UNITS
04200.F2	CONCRETE MASONRY U-BLOCK CONCRETE FILLED WITH 2- #5 REBAR CONT.
04200.G1	CAVITY WALL INSULATION
05500.A1	STEEL ANGLE LINTEL
06100.A1	2X WOOD BLOCKING
06100.A3	1X WOOD BLOCKING
06100.B1	3/4" PLYWOOD SHEATHING
07120.A2	FLUID APPLIED WATERPROOFING OVER CMU
07900.A1	BACKER ROD AND SEALANT
07900.A2	SEALANT
08111.A1	HOLLOW METAL FRAME
08410.A2	ALUMINUM STOREFRONT ENTRANCE DOORS & FRAME (EXTERIOR)
08410.B1	ALUMINUM STOREFRONT FRAMING (INTERIOR)
08410.C1	NEOPRENE SHIM
08800.A1	1/4" TINTED AND HEAT TREATED FLOAT GLASS
08800.A2	1/4" TEMPERED GLASS – INTERIOR GLAZING
09250.A1	5/8" GYPSUM BOARD
09250.B1	3-5/8" METAL STUDS
09250.B3	METAL STUD TRACK
09250.B5	2-1/2" x 2-1/2" COLD ROLLED ANGLE (20 GA.)
09250.B6	1-5/8" METAL STUDS @ 16" O.C.
09250.C1	SOUND ATTENUATION INSULATION – COMPLETELY FILL CAVITY
09250.H2	NESTED DBL 3-5/8" METAL STUD BOX BEAM
12322.A10	PLASTIC LAMINATE COUNTERTOP
12322.A4	PLASTIC LAMINATED FACE CASEWORK BASE CABINET

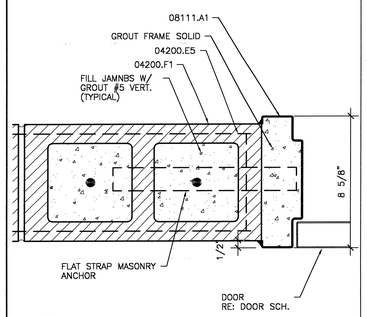

2 JAMB DETAIL
SCALE: 3" = 1'-0"

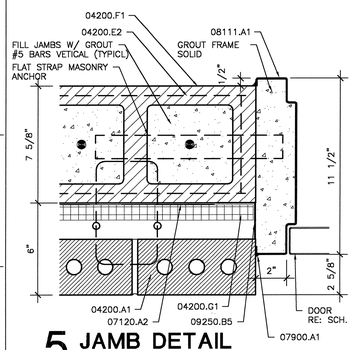

5 JAMB DETAIL
SCALE: 3" = 1'-0"

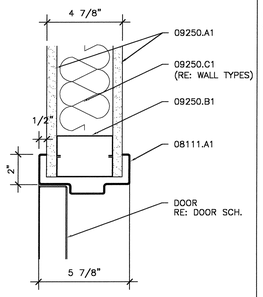

8 JAMB DETAIL
SCALE: 3" = 1'-0"

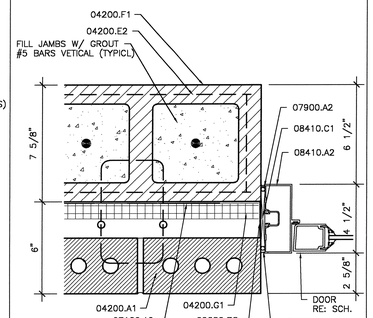

11 JAMB DETAIL
SCALE: 3" = 1'-0"

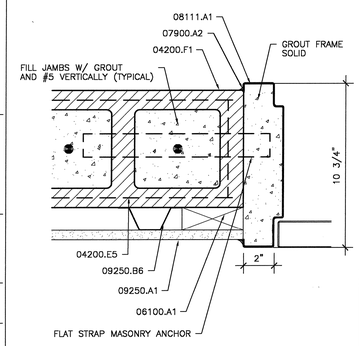

14 JAMB DETAIL
SCALE: 3" = 1'-0"

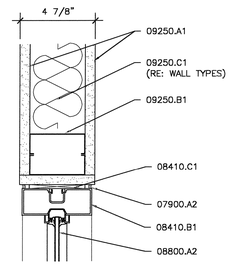

17 JAMB AT TRANSOM
SCALE: 3" = 1'-0"

DOOR AND WINDOW NOTES:

(LINTEL) FOR ALL CMU O U-BLOCK SPANS GREATER THAN 8'-0", INSTALL 16" DEEP U-BLOCK FILLED WITH CONCRETE AND (2) #7 BARS IN THE BOTTOM AND (2) #5 BARS IN THE TOP. (TYPICAL)

KEY PLAN

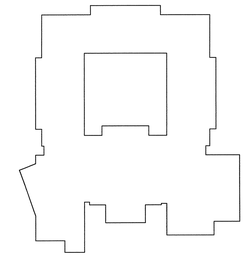

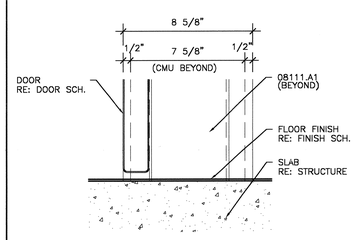

3 THRESHOLD DETAIL
SCALE: 3" = 1'-0"

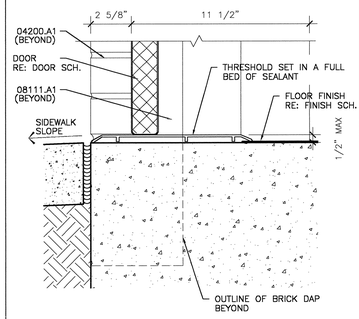

6 THRESHOLD DETAIL
SCALE: 3" = 1'-0"

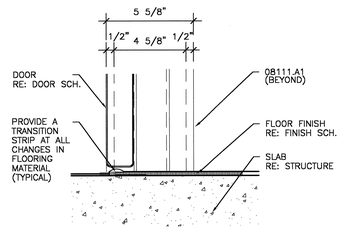

9 THRESHOLD DETAIL
SCALE: 3" = 1'-0"

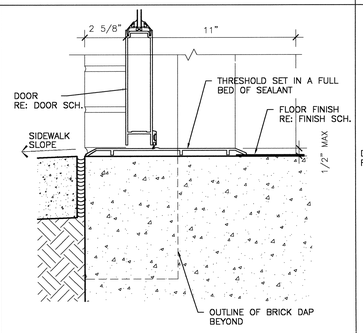

12 THRESHOLD DETAIL
SCALE: 3" = 1'-0"

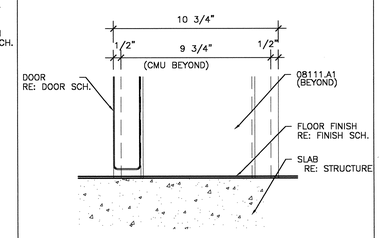

15 THRESHOLD DETAIL
SCALE: 3" = 1'-0"

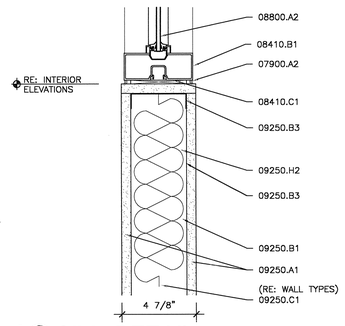

18 SILL DETAIL
SCALE: 3" = 1'-0"

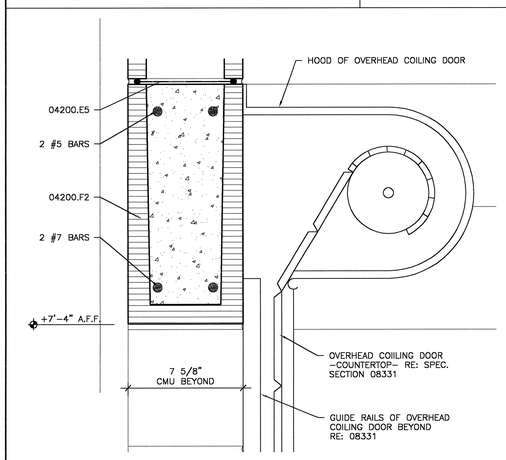

19 HEAD DETAIL (INTERIOR)
SCALE: 3" = 1'-0"

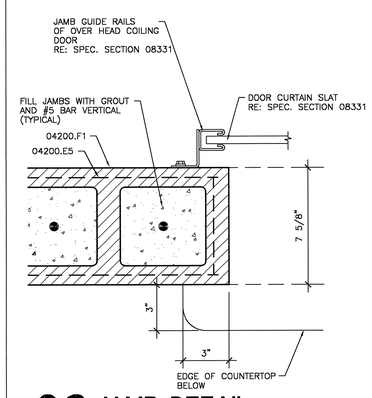

20 JAMB DETAIL
SCALE: 3" = 1'-0"

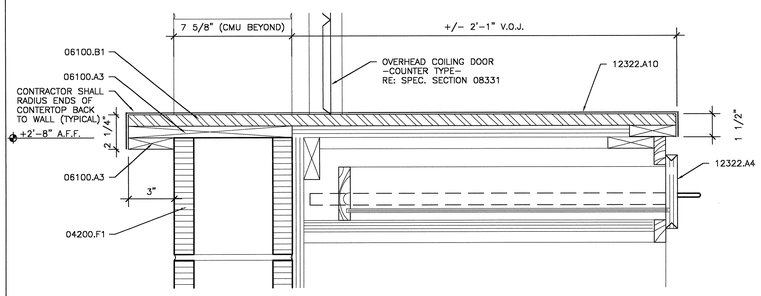

21 ROLL-UP DOOR SILL DETAIL
SCALE: 3" = 1'-0"

USE OF ARCHITECT'S DRAWINGS, SPECIFICATIONS AND OTHER DOCUMENTS

THE DRAWINGS, SPECIFICATIONS AND OTHER DOCUMENTS PREPARED BY THE ARCHITECT FOR THIS PROJECT ARE INSTRUMENTS OF THE ARCHITECT'S SERVICE FOR USE SOLELY WITH RESPECT TO THIS PROJECT AND, UNLESS OTHERWISE PROVIDED, THE ARCHITECT SHALL BE DEEMED THE AUTHOR OF THESE DOCUMENTS AND SHALL RETAIN ALL COMMON LAW, STATUTORY AND OTHER RESERVED RIGHTS, INCLUDING REPRODUCIBLE COPIES, OF THE ARCHITECT'S DRAWINGS, SPECIFICATIONS AND OTHER DOCUMENTS FOR INFORMATION AND REFERENCE IN CONNECTION WITH THE OWNER'S USE AND OCCUPANCY OF THE PROJECT. THE ARCHITECT'S DRAWINGS, SPECIFICATIONS OR OTHER DOCUMENTS SHALL NOT BE USED BY THE OWNER OR OTHERS ON OTHER PROJECTS, FOR ADDITIONS TO THIS PROJECT OR FOR COMPLETION OF THIS PROJECT BY OTHERS, UNLESS THE ARCHITECT IS ADJUDGED TO BE IN DEFAULT UNDER THIS AGREEMENT, EXCEPT BY AGREEMENT IN WRITING AND WITH APPROPRIATE COMPENSATION TO THE ARCHITECT.

NO.	DATE	REVISION/SUBMISSION
1	11/12/04	FIRE MARSHAL AND C.P. REVISIONS

McKINLEY MIDDLE MAGNET SCHOOL

1550 EDDIE ROBINSON SR. DRIVE
BATON ROUGE, LOUISIANA 70802

Robert M. Coleman & Partners Architects A.I.A.
3377 North Boulevard
Baton Rouge, Louisiana 70806
U.S.A.
tel 225.387.4414
fax 225.387.4693

DOOR DETAILS

PROJECT NO. 0304B	SHEET NO.. A4.4
DRAWN BY CS, BH, JM	
CHECKED BY JS	
DATE October 15, 2004	OF

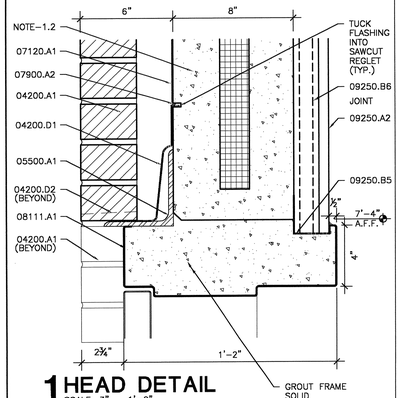

1 HEAD DETAIL
SCALE: 3" = 1'-0"

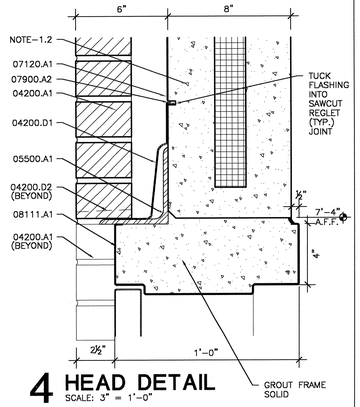

4 HEAD DETAIL
SCALE: 3" = 1'-0"

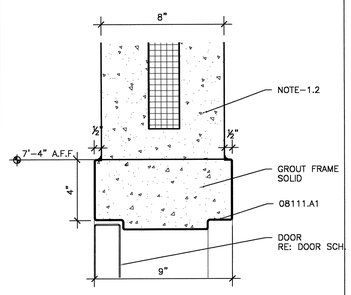

7 HEAD DETAIL
SCALE: 3" = 1'-0"

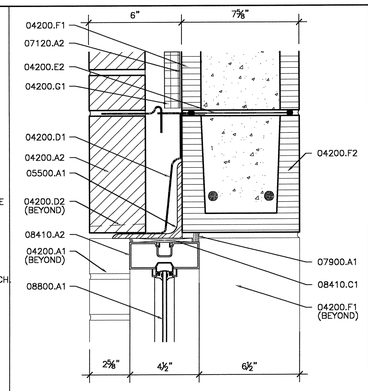

10 HEAD SECTION
SCALE: 3" = 1'-0"

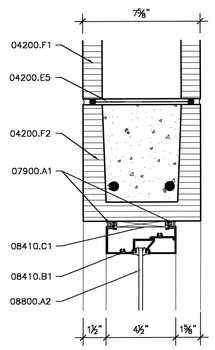

13 HEAD DETAIL
SCALE: 3" = 1'-0"

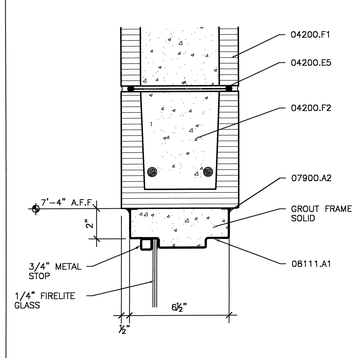

16 HEAD AT TRANSOM
SCALE: 3" = 1'-0"

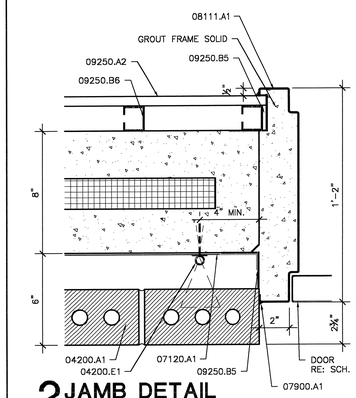

2 JAMB DETAIL
SCALE: 3" = 1'-0"

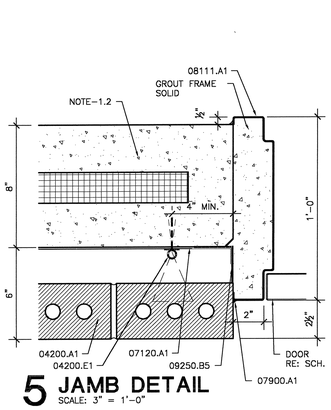

5 JAMB DETAIL
SCALE: 3" = 1'-0"

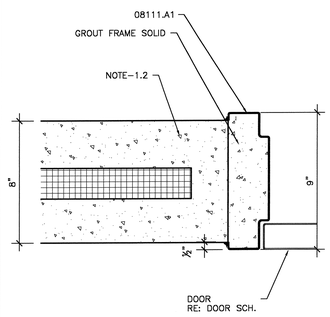

8 JAMB DETAIL
SCALE: 3" = 1'-0"

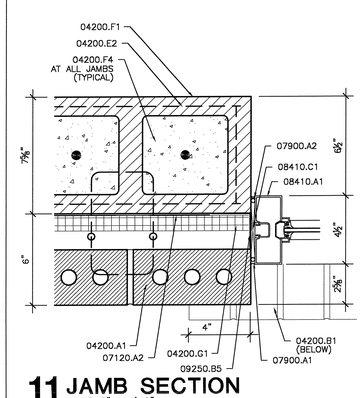

11 JAMB SECTION
SCALE: 3" = 1'-0"

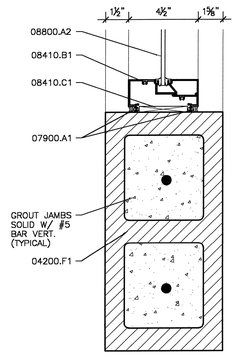

14 JAMB DETAIL
SCALE: 3" = 1'-0"

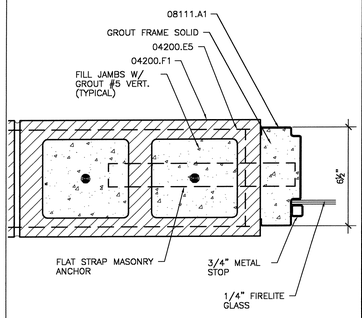

17 JAMB AT TRANSOM
SCALE: 3" = 1'-0"

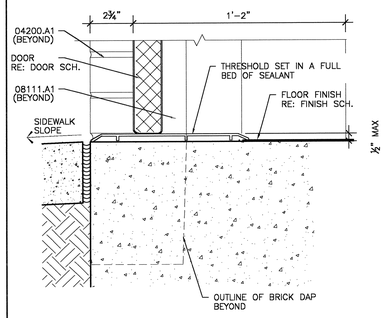

3 SILL DETAIL
SCALE: 3" = 1'-0"

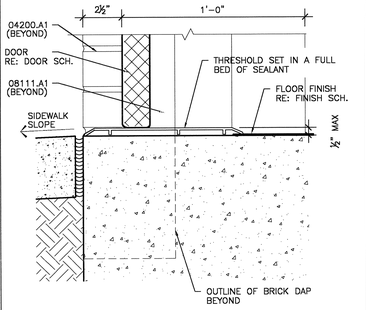

6 SILL DETAIL
SCALE: 3" = 1'-0"

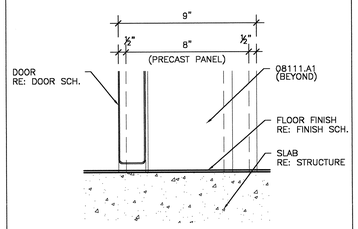

9 SILL DETAIL
SCALE: 3" = 1'-0"

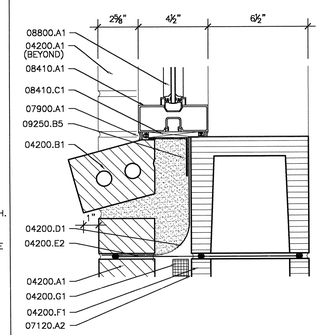

12 SILL SECTION
SCALE: 3" = 1'-0"

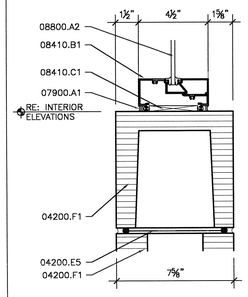

15 SILL SECTION
SCALE: 3" = 1'-0"

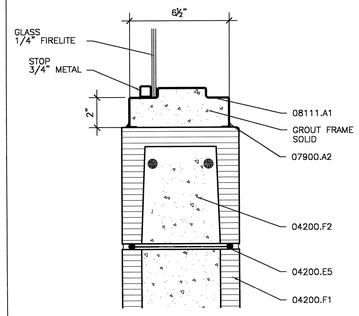

18 THRESHOLD DETAIL
SCALE: 3" = 1'-0"

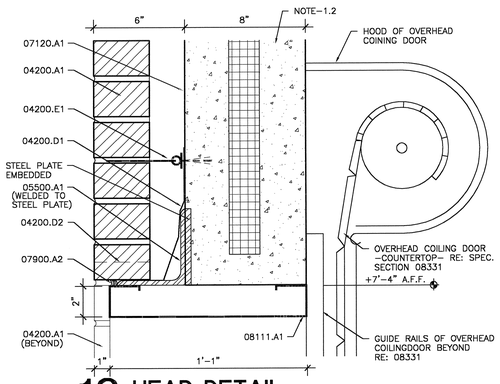

19 HEAD DETAIL
SCALE: 3" = 1'-0"

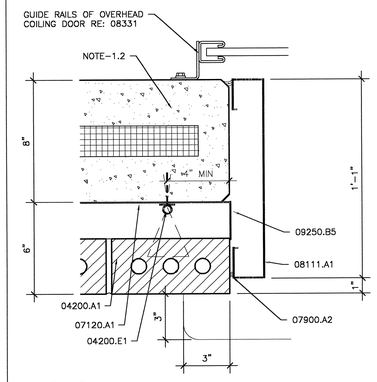

20 JAMB DETAIL
SCALE: 3" = 1'-0"

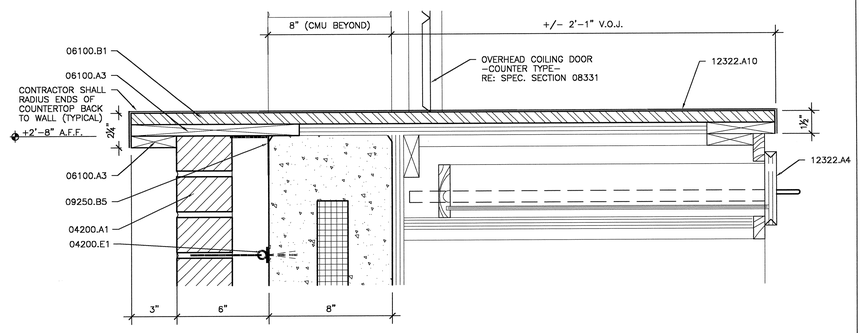

21 SILL DETAIL
SCALE: 3" = 1'-0"

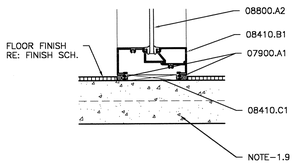

23 THRESHOLD DETAIL
SCALE: 3" = 1'-0"

MATERIAL KEYNOTES

04200.A1	4" VENEER FACE BRICK RE: ELEVATIONS AND DETAILS FOR LOCATIONS OF ACCENT COLORS OF BRICK
04200.A2	SOLDIER COURSE
04200.B1	BRICK ROWLOCK SILL TYPICAL
04200.D1	COPPER FABRIC THRU-WALL FLASHING
04200.D2	WEEP HOLES @ 24" O.C. - OPEN HEAD JOINT TYP.
04200.E1	ADJUSTABLE MASONRY VENEER WALL TIES (FOR PRECAST) @ 16" O.C. VERT. MAX 24" O.C. HORIZ. MAX. HECKMANN "POST-I-TIE" TAPON SCREW AND POST-I-TIE TRIANGLE WIRE TIE OR APPROVED EQUAL
04200.E2	TWO PIECE LADDER TYPE HORIZONTAL REINFORCING WITH ADJUSTABLE EYE AND WIRE TIE
04200.E5	LADDER TYPE HORIZONTAL REINFORCING @ 16" o.c. VERTICAL TYPICAL
04200.F1	8 X 8 X 16 CONCRETE MASONRY UNITS
04200.F2	CONCRETE MASONRY U-BLOCK CONCRETE FILLED WITH 2- #5 REBAR CONT.
04200.F4	8 X 8 X 16 CONCRETE MASONRY UNITS REINFORCED W/ #5 BAR VERTICAL AND FILL ALL CELLS AT 48" O.C. TYPICAL
04200.G1	CAVITY WALL INSULATION
05500.A1	STEEL ANGLE LINTEL
06100.A3	1X WOOD BLOCKING
06100.B1	3/4" PLYWOOD SHEATHING
07120.A1	FLUID APPLIED WATERPROOFING OEVER PRECAST PANEL. SEAL ALL PANEL JOINTS WITH BACKER ROD AND SEALANT
07120.A2	FLUID APPLIED WATERPROOFING OVER CMU
07900.A1	BACKER ROD AND SEALANT
07900.A2	SEALANT
08111.A1	HOLLOW METAL FRAME
08410.A1	ALUMINUM STOREFRONT FRAMING (EXTERIOR WINDOWS)
08410.A2	ALUMINUM STOREFRONT ENTRANCE DOORS & FRAME (EXTERIOR)
08410.B1	ALUMINUM STOREFRONT FRAMING (INTERIOR)
08410.C1	NEOPRENE SHIM
08800.A1	1/4" TINTED AND HEAT TREATED FLOAT GLASS
08800.A2	1/4" TEMPERED GLASS - INTERIOR GLAZING
09250.A2	5/8" IMPACT RESISTANT GYPSUM BOARD
09250.B5	2-1/2" x 2-1/2" COLD ROLLED ANGLE (20 GA.)
09250.B6	1-5/8" METAL STUDS @ 16" O.C.
12322.A10	PLASTIC LAMINATE COUNTERTOP
12322.A4	PLASTIC LAMINATED FACE CASEWORK BASE CABINET
NOTE-1.2	PRECAST CONCRETE PANEL RE: STRUCTURAL
NOTE-1.9	CONCRETE SLAB RE: STRUCTURAL

DOOR AND WINDOW NOTES:

(LINTEL) FOR ALL CMU O U-BLOCK SPANS GREATER THAN 8'-0", INSTALL 16" DEEP U-BLOCK FILLED WITH CONCRETE AND (2) #7 BARS IN THE BOTTOM AND (2) #5 BARS IN THE TOP. (TYPICAL)

KEY PLAN

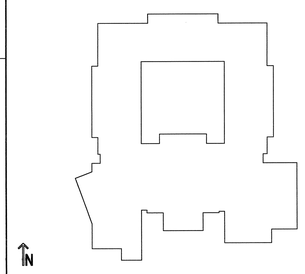

USE OF ARCHITECT'S DRAWINGS, SPECIFICATIONS AND OTHER DOCUMENTS

THE DRAWINGS, SPECIFICATIONS AND OTHER DOCUMENTS PREPARED BY THE ARCHITECT FOR THIS PROJECT ARE INSTRUMENTS OF THE ARCHITECT'S SERVICE FOR USE SOLELY WITH RESPECT TO THIS PROJECT AND, UNLESS OTHERWISE PROVIDED, THE ARCHITECT SHALL BE DEEMED THE AUTHOR OF THESE DOCUMENTS AND SHALL RETAIN ALL COMMON LAW, STATUTORY AND OTHER RESERVED RIGHTS, INCLUDING REPRODUCIBLE COPIES, OF THE ARCHITECT'S DRAWINGS, SPECIFICATIONS AND OTHER DOCUMENTS FOR INFORMATION AND REFERENCE IN CONNECTION WITH THE OWNER'S USE AND OCCUPANCY OF THE PROJECT. THE ARCHITECT'S DRAWINGS, SPECIFICATIONS OR OTHER DOCUMENTS SHALL NOT BE USED BY THE OWNER OR OTHERS ON OTHER PROJECTS, FOR ADDITIONS TO THIS PROJECT OR FOR COMPLETION OF THIS PROJECT BY OTHERS, UNLESS THE ARCHITECT IS ADJUDGED TO BE IN DEFAULT UNDER THIS AGREEMENT, EXCEPT BY AGREEMENT IN WRITING AND WITH APPROPRIATE COMPENSATION TO THE ARCHITECT.

NO.	DATE	REVISION/SUBMISSION
1	11/12/04	FIRE MARSHAL AND C.P. REVISIONS

McKINLEY MIDDLE MAGNET SCHOOL

1550 EDDIE ROBINSON SR. DRIVE
BATON ROUGE, LOUISIANA 70802

Robert M. Coleman & Partners Architects A.I.A.
3377 North Boulevard
Baton Rouge, Louisiana 70806
U.S.A.
tel 225.387.4414
fax 225.387.4693

DOOR DETAILS

PROJECT NO.	0304B
DRAWN BY	CS, BH, JM
CHECKED BY	JS
DATE	October 15, 2004
SHEET NO..	A4.5
	____ OF ____

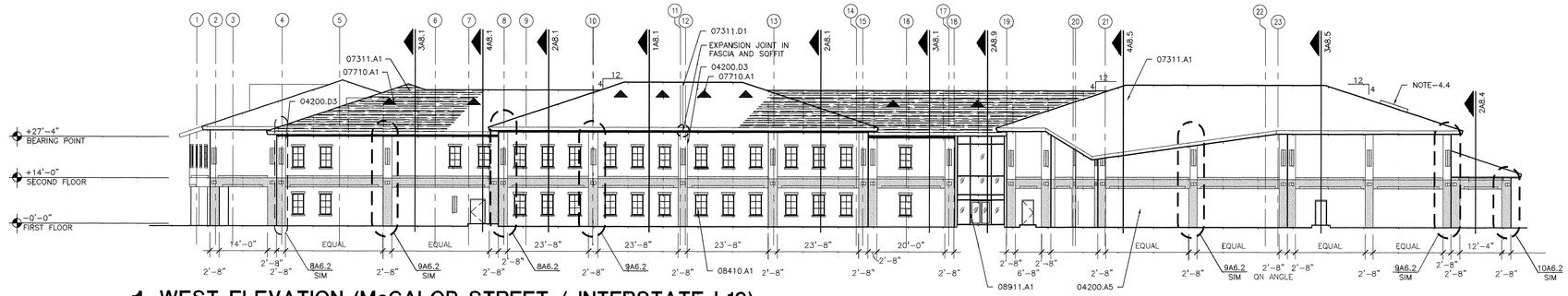

1 WEST ELEVATION (McCALOP STREET / INTERSTATE I-10)
SCALE: 1/16" = 1'-0"

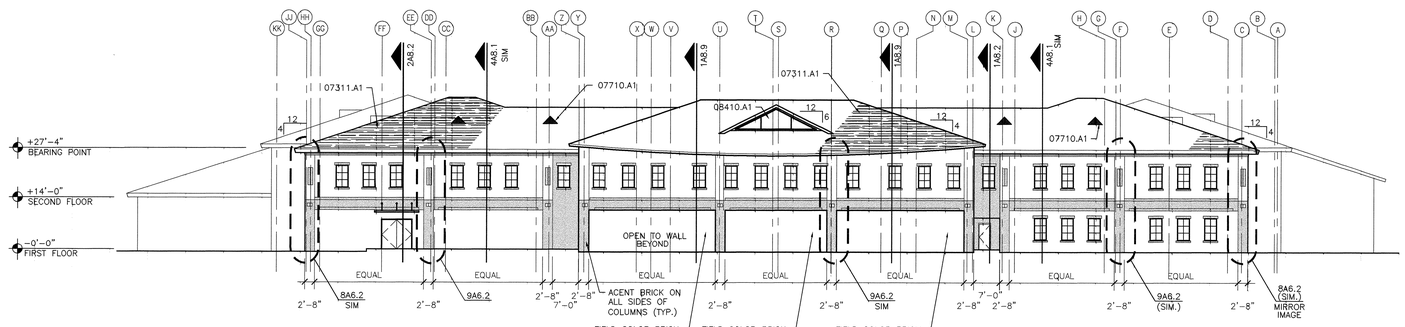

2 NORTH ELEVATION (LOUISE STREET)
SCALE: 1/16" = 1'-0"

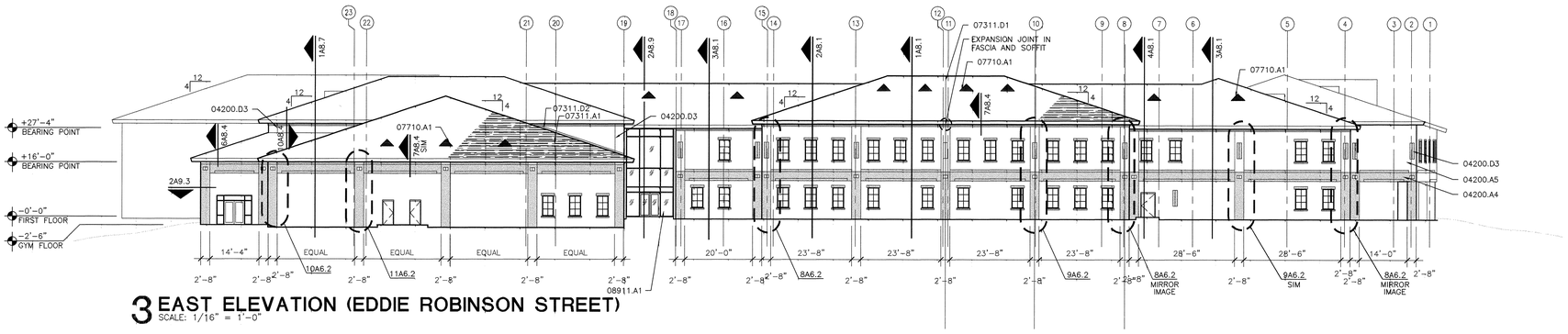

3 EAST ELEVATION (EDDIE ROBINSON STREET)
SCALE: 1/16" = 1'-0"

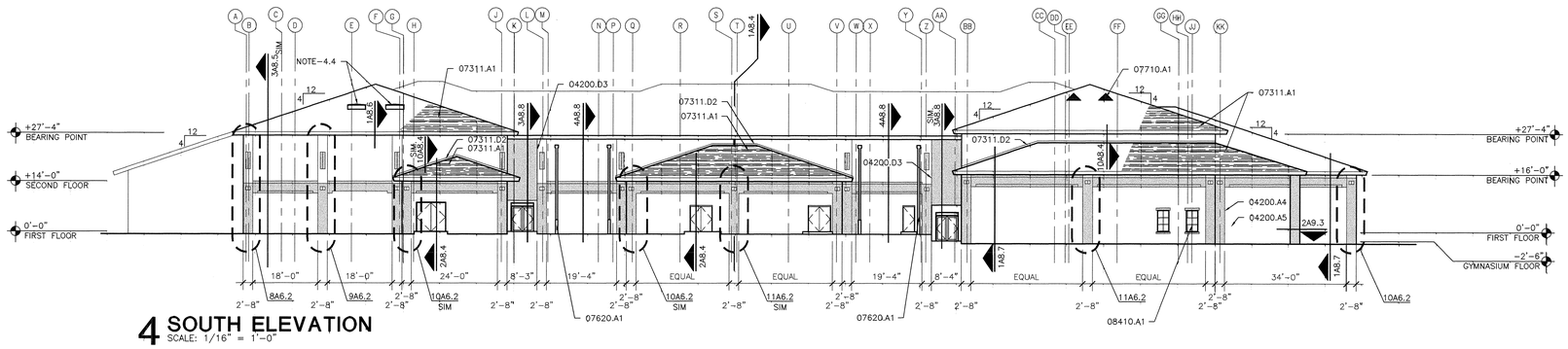

4 SOUTH ELEVATION
SCALE: 1/16" = 1'-0"

0 8' 16' 32'

NOTE: EXTERIOR CANOPIES NOT SHOWN FOR CLARITY – REFER TO SHEET A6.4

MATERIAL KEYNOTES

04200.A4	4" FACE BRICK – ACCENT COLOR
04200.A5	4" FACE BRICK – FIELD COLOR
04200.D3	MASONRY CONTROL JOINT
07311.A1	ASPHALT SHINGLES
07311.D1	PREFINISHED METAL EXPANSION JOINT FLASHING AND CLEATS
07311.D2	STEP FLASHING
07620.A1	SCUPPER, CONDUCTOR HEAD AND DOWN SPOUT RE: SPECIFICATIONS
07710.A1	MANUFACTURED COPPER GABLE END VENT
08410.A1	ALUMINUM STOREFRONT FRAMING (EXTERIOR WINDOWS)
08911.A1	ALUMINUM CURTAIN WALLS
NOTE-4.4	SMOKE VENT RE: MECHANICAL

LEGEND:

ACCENT COLOR BRICK TO BE PICKED BY ARCHITECT

FIELD COLOR BRICK TO BE PICKED BY ARCHITECT

KEY PLAN

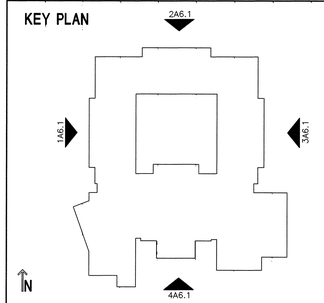

USE OF ARCHITECT'S DRAWINGS, SPECIFICATIONS AND OTHER DOCUMENTS

THE DRAWINGS, SPECIFICATIONS AND OTHER DOCUMENTS PREPARED BY THE ARCHITECT FOR THIS PROJECT ARE INSTRUMENTS OF THE ARCHITECT'S SERVICE FOR USE SOLELY WITH RESPECT TO THIS PROJECT AND, UNLESS OTHERWISE PROVIDED, THE ARCHITECT SHALL BE DEEMED THE AUTHOR OF THESE DOCUMENTS AND SHALL RETAIN ALL COMMON LAW, STATUTORY AND OTHER RESERVED RIGHTS, INCLUDING REPRODUCIBLE COPIES, OF THE ARCHITECT'S DRAWINGS, SPECIFICATIONS AND OTHER DOCUMENTS FOR INFORMATION AND REFERENCE IN CONNECTION WITH THE OWNER'S USE AND OCCUPANCY OF THE PROJECT. THE ARCHITECT'S DRAWINGS, SPECIFICATIONS OR OTHER DOCUMENTS SHALL NOT BE USED BY THE OWNER OR OTHERS ON OTHER PROJECTS, FOR ADDITIONS TO THIS PROJECT OR FOR COMPLETION OF THIS PROJECT BY OTHERS, UNLESS THE ARCHITECT IS ADJUDGED TO BE IN DEFAULT UNDER THIS AGREEMENT, EXCEPT BY AGREEMENT IN WRITING AND WITH APPROPRIATE COMPENSATION TO THE ARCHITECT.

NO.	DATE	REVISION/SUBMISSION
1	11/12/04	FIRE MARSHAL AND C.P. REVISIONS

McKINLEY MIDDLE MAGNET SCHOOL

1550 EDDIE ROBINSON SR. DRIVE
BATON ROUGE, LOUISIANA 70802

Robert M. Coleman & Partners Architects A.I.A.
3377 North Boulevard
Baton Rouge, Louisiana 70806
U.S.A.
tel 225.387.4414
fax 225.387.4663

EXTERIOR ELEVATIONS

PROJECT NO. 03048	SHEET NO.. A6.1
DRAWN BY CS, BH, JM	
CHECKED BY JS	
DATE October 15, 2004	OF

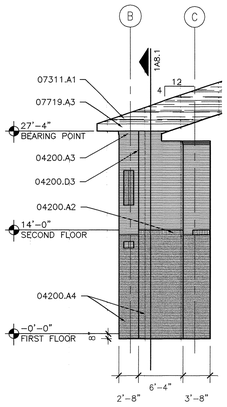

1 EXTERIOR ELEVATION
SCALE: 1/8" = 1'-0"

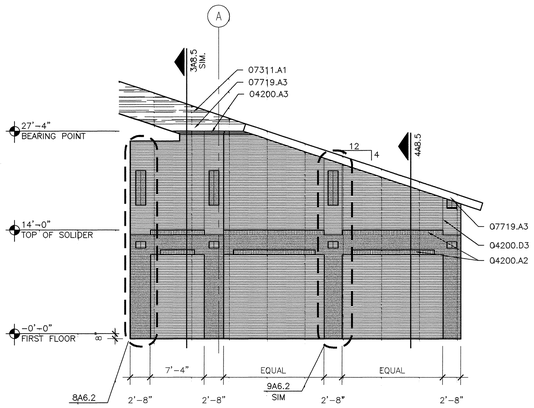

2 EXTERIOR ELEVATION
SCALE: 1/8" = 1'-0"

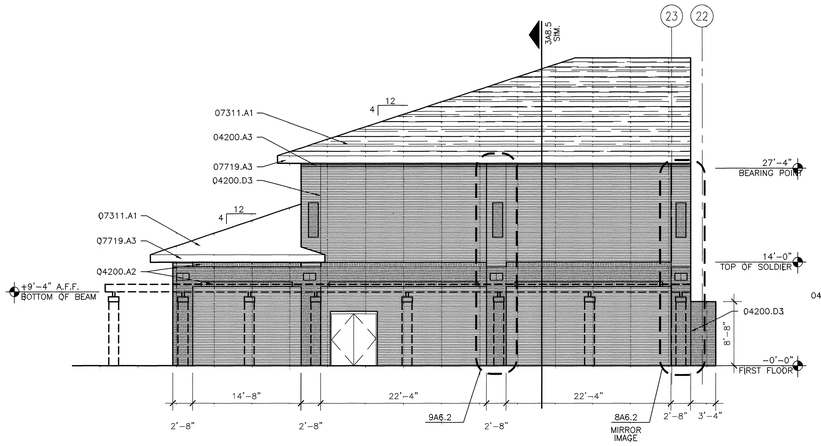

3 EXTERIOR ELEVATION
SCALE: 1/8" = 1'-0"

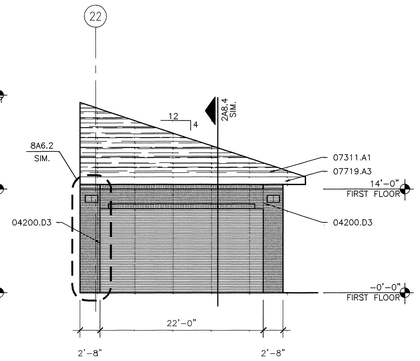

4 EXTERIOR ELEVATION
SCALE: 1/8" = 1'-0"

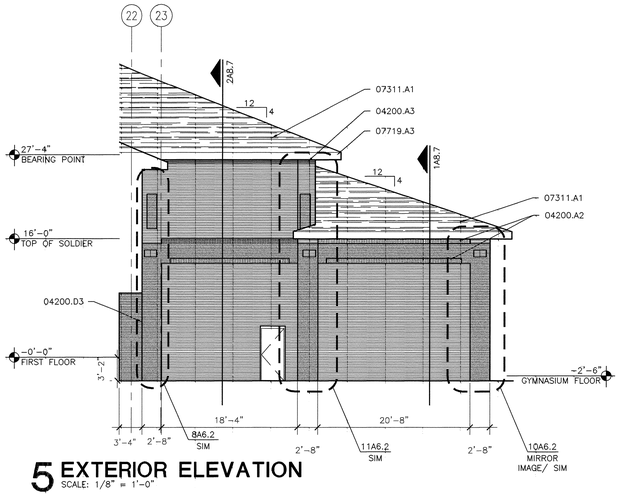

5 EXTERIOR ELEVATION
SCALE: 1/8" = 1'-0"

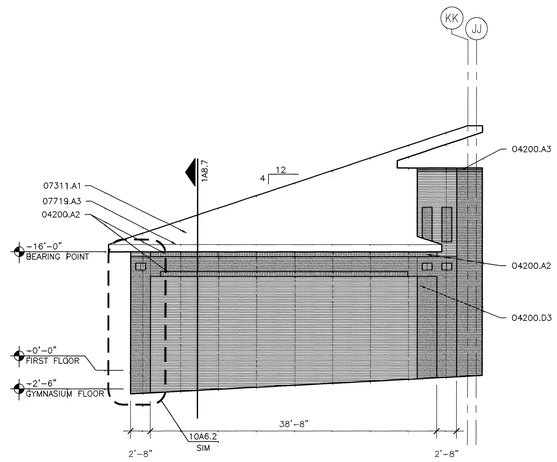

6 EXTERIOR ELEVATION
SCALE: 1/8" = 1'-0"

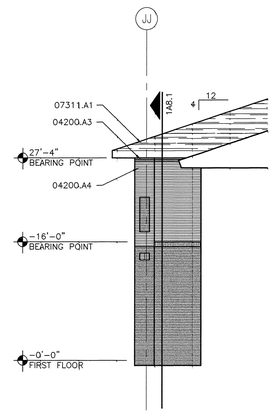

7 EXTERIOR ELEVATION
SCALE: 1/8" = 1'-0"

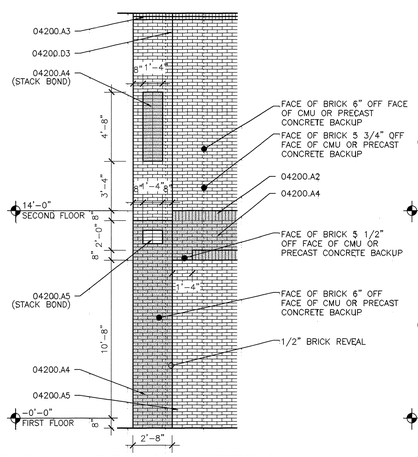

8 TYPICAL BRICK PATTERN AT CORNER
SCALE: 1/4" = 1'-0"

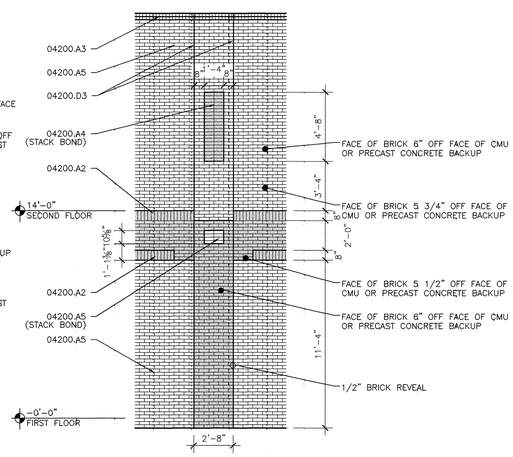

9 TYPICAL BRICK PATTERN AT INTERMEDIATE LOCATIONS
SCALE: 1/4" = 1'-0"

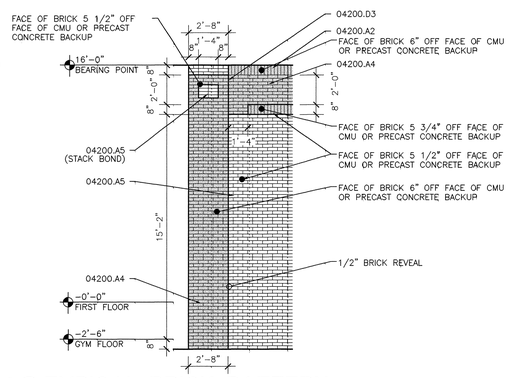

10 TYPICAL BRICK PATTERN AT CORNER
SCALE: 1/4" = 1'-0"

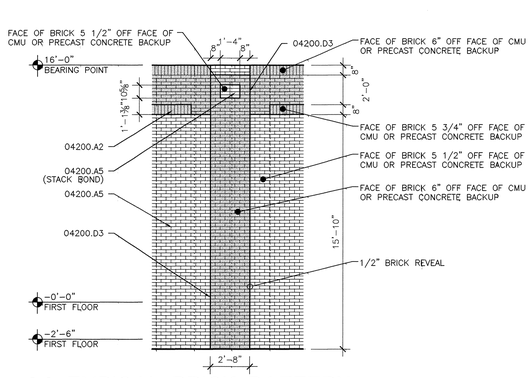

11 TYPICAL BRICK PATTERN AT INTERMEDIATE LOCATIONS
SCALE: 1/4" = 1'-0"

MATERIAL KEYNOTES

04200.A2	SOLDIER COURSE
04200.A3	ROWLOCK COURSE
04200.A4	4" FACE BRICK – ACCENT COLOR
04200.A5	4" FACE BRICK – FIELD COLOR
04200.D3	MASONRY CONTROL JOINT
07311.A1	ASPHALT SHINGLES
07719.A3	PREFINISHED METAL FASCIA MATCH FINISH OF SOFFIT PANEL

LEGEND:

ACCENT COLOR BRICK TO BE PICKED BY ARCHITECT

FIELD COLOR BRICK TO BE PICKED BY ARCHITECT

KEY PLAN

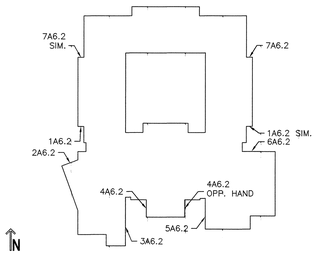

USE OF ARCHITECT'S DRAWINGS, SPECIFICATIONS AND OTHER DOCUMENTS

THE DRAWINGS, SPECIFICATIONS AND OTHER DOCUMENTS PREPARED BY THE ARCHITECT FOR THIS PROJECT ARE INSTRUMENTS OF THE ARCHITECT'S SERVICE FOR USE SOLELY WITH RESPECT TO THIS PROJECT AND, UNLESS OTHERWISE PROVIDED, THE ARCHITECT SHALL BE DEEMED THE AUTHOR OF THESE DOCUMENTS AND SHALL RETAIN ALL COMMON LAW, STATUTORY AND OTHER RESERVED RIGHTS, INCLUDING REPRODUCIBLE COPIES, OF THE ARCHITECT'S DRAWINGS, SPECIFICATIONS AND OTHER DOCUMENTS FOR INFORMATION AND REFERENCE IN CONNECTION WITH THE OWNER'S USE AND OCCUPANCY OF THE PROJECT. THE ARCHITECT'S DRAWINGS, SPECIFICATIONS OR OTHER DOCUMENTS SHALL NOT BE USED BY THE OWNER OR OTHERS ON OTHER PROJECTS, FOR ADDITIONS TO THIS PROJECT OR FOR COMPLETION OF THIS PROJECT BY OTHERS, UNLESS THE ARCHITECT IS ADJUDGED TO BE IN DEFAULT UNDER THIS AGREEMENT, EXCEPT BY AGREEMENT IN WRITING AND WITH APPROPRIATE COMPENSATION TO THE ARCHITECT.

NO.	DATE	REVISION/SUBMISSION
1	11/12/04	FIRE MARSHAL AND C.P. REVISIONS

McKINLEY MIDDLE MAGNET SCHOOL

1550 EDDIE ROBINSON SR. DRIVE
BATON ROUGE, LOUISIANA 70802

Robert M. Coleman & Partners Architects A.I.A.
3377 North Boulevard
Baton Rouge, Louisiana 70806
U.S.A.
tel 225.387.4414
fax 225.387.4695

ENLARGED EXTERIOR ELEVATIONS

PROJECT NO. 03048	SHEET NO.. A6.2
DRAWN BY CS, JM	
CHECKED BY JS	
DATE October 15, 2004	OF

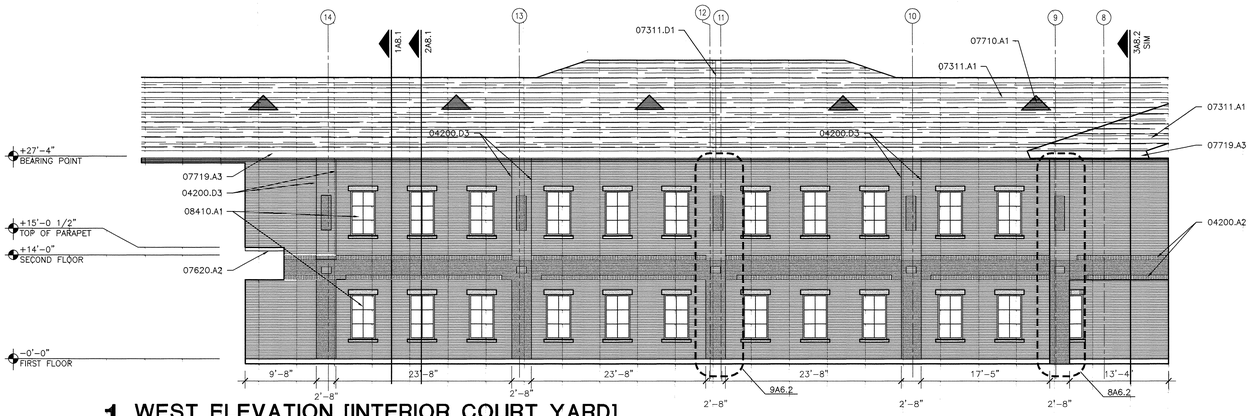

1 WEST ELEVATION [INTERIOR COURT YARD]
SCALE: 1/8" = 1'-0"

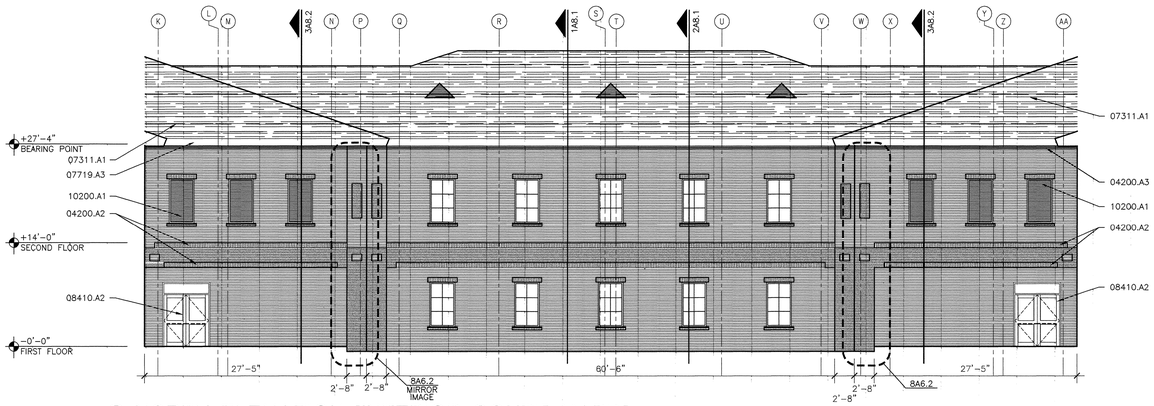

2 NORTH ELEVATION [INTERIOR COURT YARD]
SCALE: 1/8" = 1'-0"

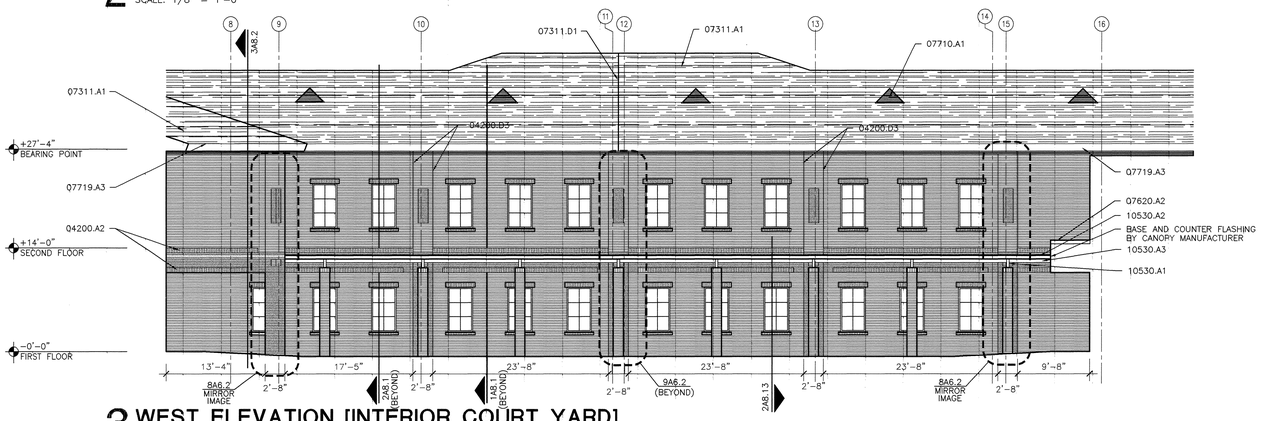

3 WEST ELEVATION [INTERIOR COURT YARD]
SCALE: 1/8" = 1'-0"

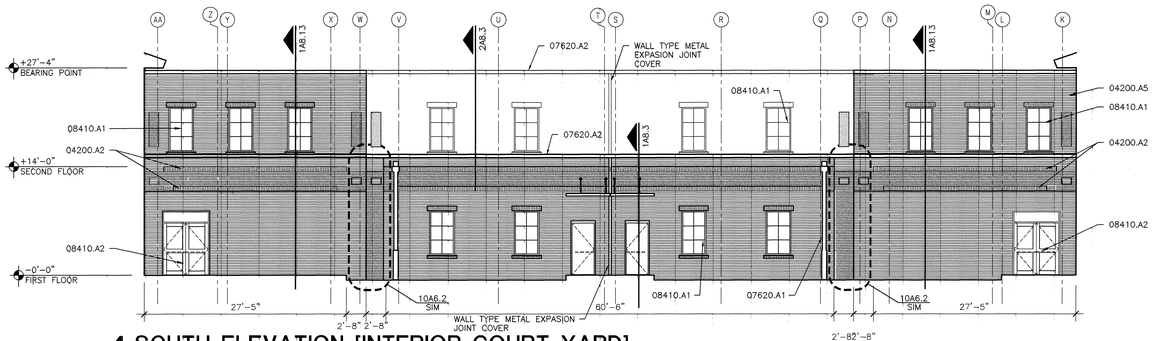

4 SOUTH ELEVATION [INTERIOR COURT YARD]
SCALE: 1/8" = 1'-0"

MATERIAL KEYNOTES

04200.A2	SOLDIER COURSE
04200.A3	ROWLOCK COURSE
04200.A5	4" FACE BRICK – FIELD COLOR
04200.D3	MASONRY CONTROL JOINT
07311.A1	ASPHALT SHINGLES
07311.D1	PREFINISHED METAL EXPANSION JOINT FLASHING AND CLEATS
07620.A1	SCUPPER, CONDUCTOR HEAD AND DOWN SPOUT RE: SPECIFICATIONS
07620.A2	PREFINISHED METAL COPING WITH CONTINUOUS HOLD DOWN CLEAT
07710.A1	MANUFACTURED COPPER GABLE END VENT
07719.A3	PREFINISHED METAL FASCIA MATCH FINISH OF SOFFIT PANEL
08410.A1	ALUMINUM STOREFRONT FRAMING (EXTERIOR WINDOWS)
08410.A2	ALUMINUM STOREFRONT ENTRANCE DOORS & FRAME (EXTERIOR)
10200.A1	EXTRUDED ALUMINUM LOUVER
10530.A1	WALKWAY COVER COLUMN (DRAINABLE)
10530.A2	WALKWAY COVER FASCIA
10530.A3	WALKWAY COVER BEAM

LEGEND:

ACCENT COLOR BRICK TO BE PICKED BY ARCHITECT

FIELD COLOR BRICK TO BE PICKED BY ARCHITECT

KEY PLAN

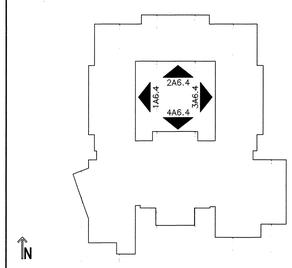

USE OF ARCHITECT'S DRAWINGS, SPECIFICATIONS AND OTHER DOCUMENTS

THE DRAWINGS, SPECIFICATIONS AND OTHER DOCUMENTS PREPARED BY THE ARCHITECT FOR THIS PROJECT ARE INSTRUMENTS OF THE ARCHITECT'S SERVICE FOR USE SOLELY WITH RESPECT TO THIS PROJECT AND, UNLESS OTHERWISE PROVIDED, THE ARCHITECT SHALL BE DEEMED THE AUTHOR OF THESE DOCUMENTS AND SHALL RETAIN ALL COMMON LAW, STATUTORY AND OTHER RESERVED RIGHTS, INCLUDING REPRODUCIBLE COPIES, OF THE ARCHITECT'S DRAWINGS, SPECIFICATIONS AND OTHER DOCUMENTS FOR INFORMATION AND REFERENCE IN CONNECTION WITH THE OWNER'S USE AND OCCUPANCY OF THE PROJECT. THE ARCHITECT'S DRAWINGS, SPECIFICATIONS OR OTHER DOCUMENTS SHALL NOT BE USED BY THE OWNER OR OTHERS ON OTHER PROJECTS, FOR ADDITIONS TO THIS PROJECT OR FOR COMPLETION OF THIS PROJECT BY OTHERS, UNLESS THE ARCHITECT IS ADJUDGED TO BE IN DEFAULT UNDER THIS AGREEMENT, EXCEPT BY AGREEMENT IN WRITING AND WITH APPROPRIATE COMPENSATION TO THE ARCHITECT.

NO.	DATE	REVISION/SUBMISSION
1	11/12/04	FIRE MARSHAL AND C.P. REVISIONS

McKINLEY MIDDLE MAGNET SCHOOL

1550 EDDIE ROBINSON SR. DRIVE
BATON ROUGE, LOUISIANA 70802

Robert M. Coleman & Partners Architects A.I.A.
3377 North Boulevard
Baton Rouge, Louisiana 70806
U.S.A.
tel 225.387.4414
fax 225.387.4693

ENLARGED EXTERIOR ELEVATIONS

PROJECT NO. 03048	SHEET NO.. A6.3
DRAWN BY CS	
CHECKED BY JS	
DATE October 15, 2004	OF

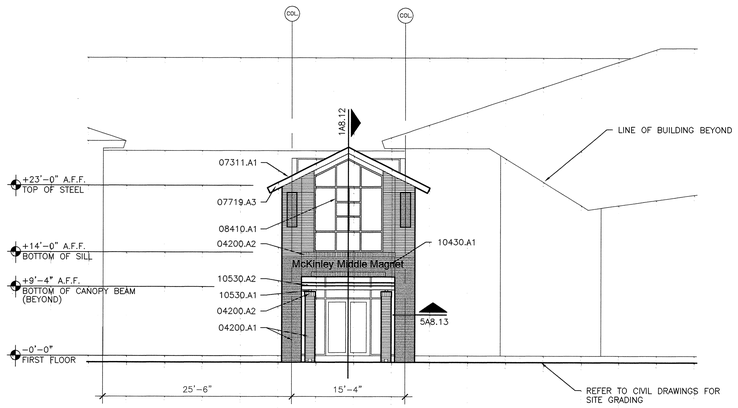

1 CANOPY ELEVATION (McCALOP STREET / INTERSTATE I-10)

SCALE: 1/8" = 1'-0"

NOTES: 1. REFER TO CIVIL DRAWINGS FOR ALL GRADING ELEVATIONS.

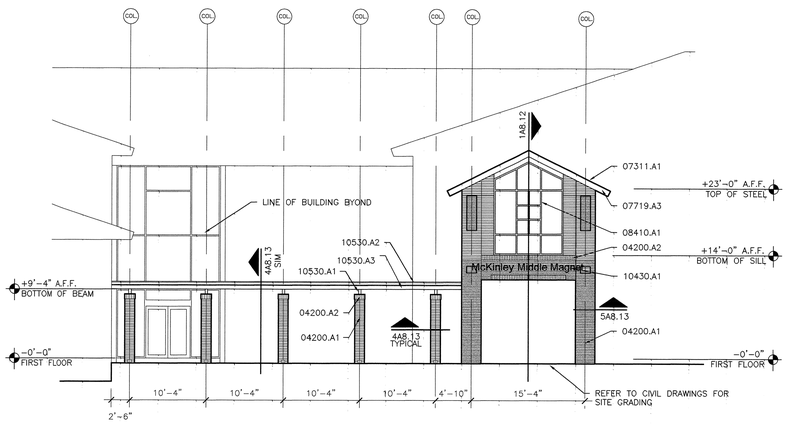

2 EAST ELEVATION (EDDIE ROBINSON STREET)

SCALE: 1/8" = 1'-0"

NOTES: 1. REFER TO CIVIL DRAWINGS FOR ALL GRADING ELEVATIONS.

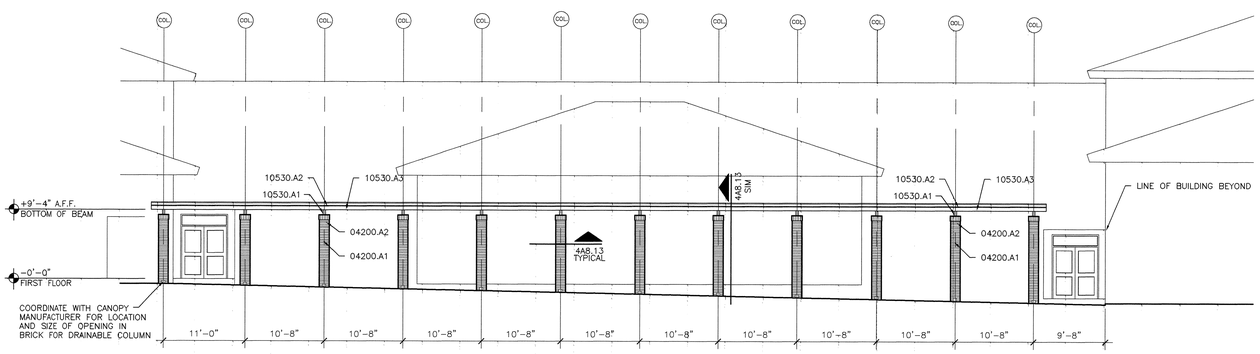

NOTES: 1. REFER TO CIVIL DRAWINGS FOR ALL GRADING ELEVATIONS.

3 SOUTH ELEVATION - BUS DROP-OFF

SCALE: 1/8" = 1'-0"

MATERIAL KEYNOTES

04200.A1	4" VENEER FACE BRICK RE: ELEVATIONS AND DETAILS FOR LOCATIONS OF ACCENT COLORS OF BRICK
04200.A2	SOLDIER COURSE
07311.A1	ASPHALT SHINGLES
07719.A3	PREFINISHED METAL FASCIA MATCH FINISH OF SOFFIT PANEL
08410.A1	ALUMINUM STOREFRONT FRAMING (EXTERIOR WINDOWS)
10430.A1	EXTERIOR METAL LETTERS RE: SPECIFICATIONS
10530.A1	WALKWAY COVER COLUMN (DRAINABLE)
10530.A2	WALKWAY COVER FASCIA
10530.A3	WALKWAY COVER BEAM

LEGEND:

ACCENT COLOR BRICK TO BE PICKED BY ARCHITECT

FIELD COLOR BRICK TO BE PICKED BY ARCHITECT

KEY PLAN

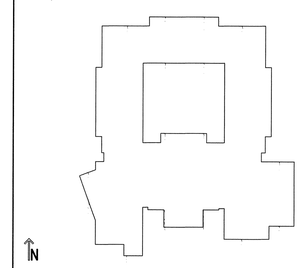

USE OF ARCHITECT'S DRAWINGS, SPECIFICATIONS AND OTHER DOCUMENTS

THE DRAWINGS, SPECIFICATIONS AND OTHER DOCUMENTS PREPARED BY THE ARCHITECT FOR THIS PROJECT ARE INSTRUMENTS OF THE ARCHITECT'S SERVICE FOR USE SOLELY WITH RESPECT TO THIS PROJECT AND, UNLESS OTHERWISE PROVIDED, THE ARCHITECT SHALL BE DEEMED THE AUTHOR OF THESE DOCUMENTS AND SHALL RETAIN ALL COMMON LAW, STATUTORY AND OTHER RESERVED RIGHTS, INCLUDING REPRODUCIBLE COPIES, OF THE ARCHITECT'S DRAWINGS, SPECIFICATIONS AND OTHER DOCUMENTS FOR INFORMATION AND REFERENCE IN CONNECTION WITH THE OWNER'S USE AND OCCUPANCY OF THE PROJECT. THE ARCHITECT'S DRAWINGS, SPECIFICATIONS OR OTHER DOCUMENTS SHALL NOT BE USED BY THE OWNER OR OTHERS ON OTHER PROJECTS, FOR ADDITIONS TO THIS PROJECT OR FOR COMPLETION OF THIS PROJECT BY OTHERS, UNLESS THE ARCHITECT IS ADJUDGED TO BE IN DEFAULT UNDER THIS AGREEMENT, EXCEPT BY AGREEMENT IN WRITING AND WITH APPROPRIATE COMPENSATION TO THE ARCHITECT.

NO.	DATE	REVISION/SUBMISSION
1	11/12/04	FIRE MARSHAL AND C.P. REVISIONS

McKINLEY MIDDLE MAGNET SCHOOL

1550 EDDIE ROBINSON SR. DRIVE
BATON ROUGE, LOUISIANA 70802

Robert M. Coleman & Partners Architects A.I.A.
3377 North Boulevard
Baton Rouge, Louisiana
70806
U.S.A.
tel 225.387.4414
fax 225.387.4693

CANOPY ELEVATIONS

PROJECT NO. 03048	SHEET NO.. A6.4
DRAWN BY CS, JM	
CHECKED BY JS	
DATE October 15, 2004	OF

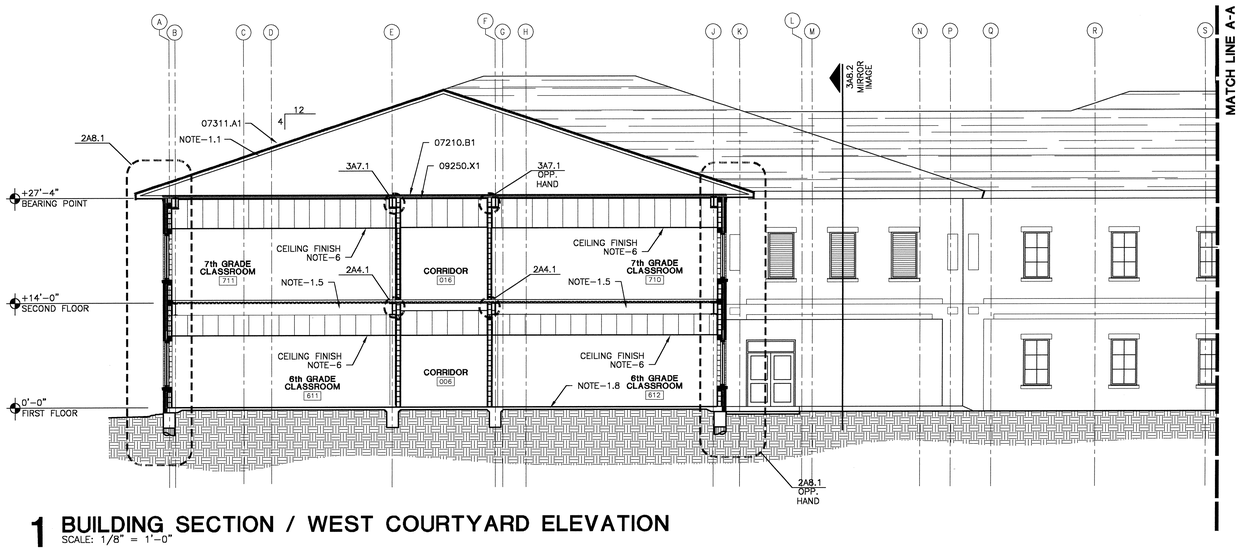

1 BUILDING SECTION / WEST COURTYARD ELEVATION
SCALE: 1/8" = 1'-0"

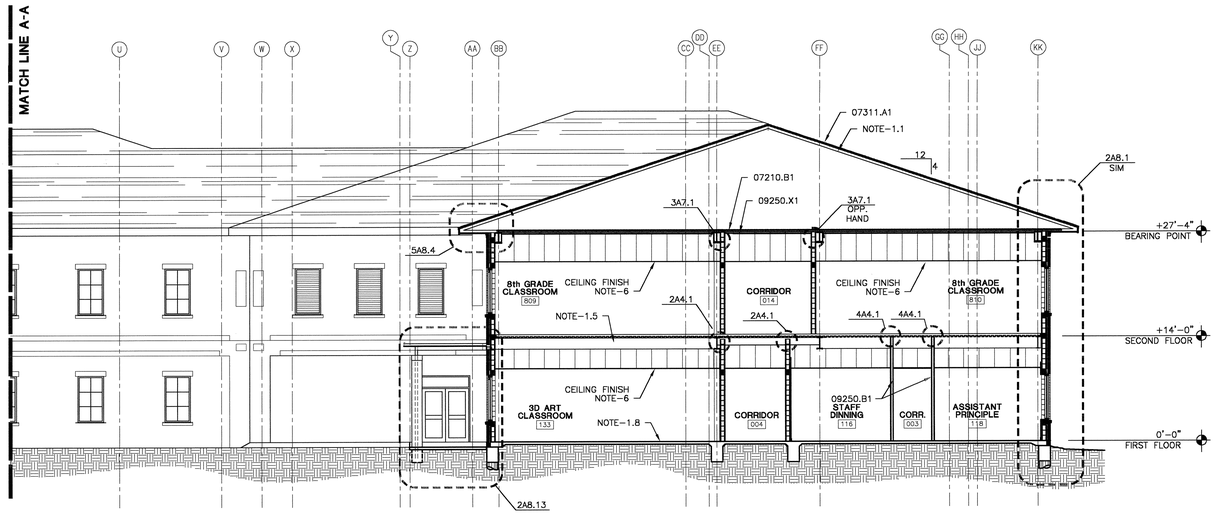

2 BUILDING SECTION / EAST COURTYARD ELEVATION
SCALE: 1/8" = 1'-0"

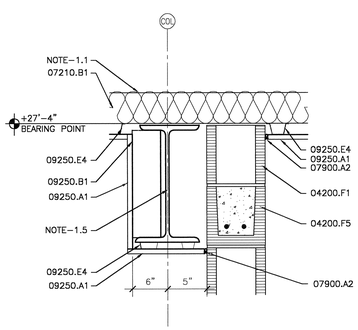

3 FURRING DETAIL
SCALE: 1" = 1'-0"

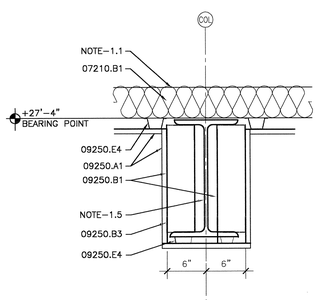

4 FURRING DETAIL
SCALE: 1" = 1'-0"

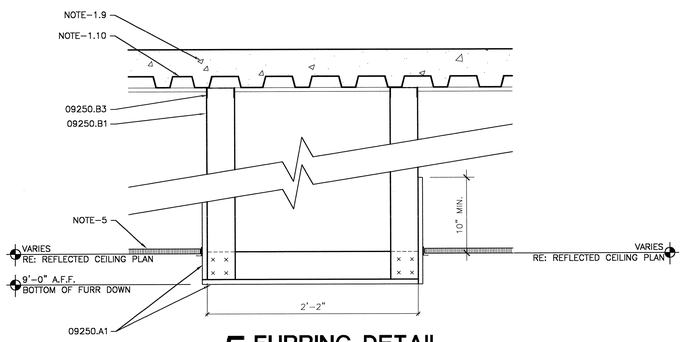

5 FURRING DETAIL
SCALE: 1" = 1'-0"

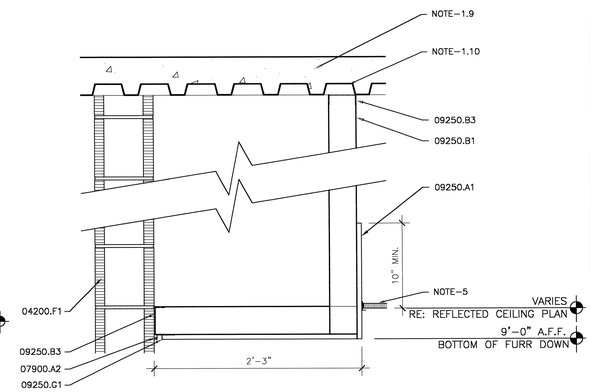

6 FURRING DETAIL
SCALE: 1" = 1'-0"

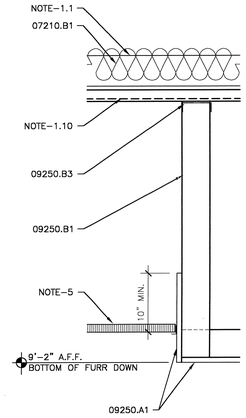

8 FURRING DETAIL
SCALE: 1" = 1'-0"

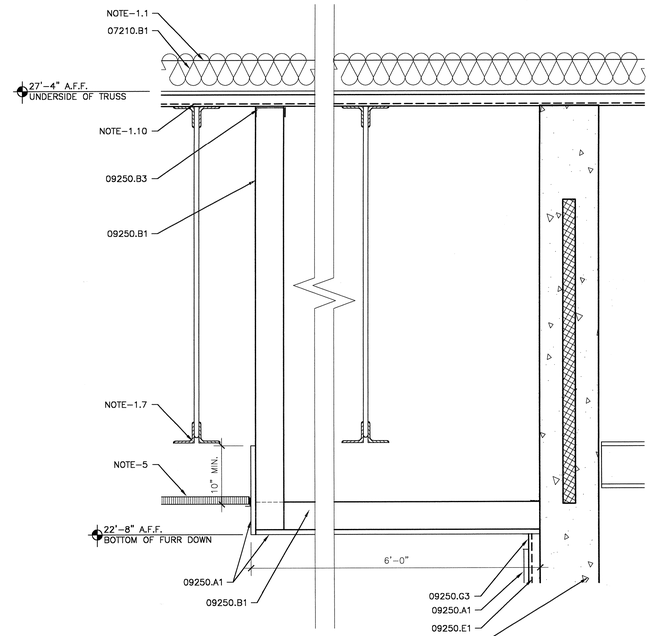

7 FURRING DETAIL
SCALE: 1" = 1'-0"

MATERIAL KEYNOTES

04200.F1	8 X 8 X 16 CONCRETE MASONRY UNITS
04200.F5	CONCRETE MASONRY U-BLOCK BOND BEAM CONCRETE FILLED WITH 2- #5 REBAR
07210.B1	LOOSE FILL INSULATION R-30 MINIMUM
07311.A1	ASPHALT SHINGLES
07900.A2	SEALANT
09250.A1	5/8" GYPSUM BOARD
09250.B1	3-5/8" METAL STUDS
09250.B3	METAL STUD TRACK
09250.E1	1-1/2" METAL FURRING CHANNEL @ 16" O.C.
09250.E4	7/8" METAL FURRING CHANNEL @ 16" O.C.
09250.G1	EXTRUDED ALUMINUM DRYWALL REVEAL 3/4" - TYPE F" REVEAL
09250.G3	EXTRUDED ALUMINUM DRYWALL REVEAL 2" - TYPE F" REVEAL
09250.X1	INSTALL 7/8" HAT CHANNELS @ 16 O.C. ON UNDERSIDE OF ALL PRE-ENGINEERED TRUSSES. INSTALL 5/8" GYPSUM BOARD ACROSS ENTIRE UNDERSIDE OF TRUSSES. TAPE AND FLOAT BEFORE ERECTING PARTITIONS TO UNDERSIDE OF GYPSUM BOARD.
NOTE-1.1	PRE-ENGINEERED ROOF TRUSS RE: STRUCTURAL
NOTE-1.10	STEEL DECKING RE: STRUCTURAL
NOTE-1.2	PRECAST CONCRETE PANEL RE: STRUCTURAL
NOTE-1.5	STEEL BEAM RE: STRUCTURAL
NOTE-1.7	STEEL JOIST RE: STRUCTURAL
NOTE-1.8	FOUNDATION RE: STRUCTURAL
NOTE-1.9	CONCRETE SLAB RE: STRUCTURAL
NOTE-5	RE: REFLECTED CEILING PLAN - ALL SERIES
NOTE-6	RE: FINISH SCHEDULE

KEY PLAN

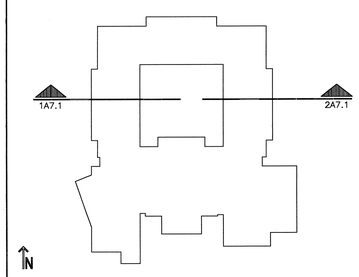

USE OF ARCHITECT'S DRAWINGS, SPECIFICATIONS AND OTHER DOCUMENTS

THE DRAWINGS, SPECIFICATIONS AND OTHER DOCUMENTS PREPARED BY THE ARCHITECT FOR THIS PROJECT ARE INSTRUMENTS OF THE ARCHITECT'S SERVICE FOR USE SOLELY WITH RESPECT TO THIS PROJECT AND, UNLESS OTHERWISE PROVIDED, THE ARCHITECT SHALL BE DEEMED THE AUTHOR OF THESE DOCUMENTS AND SHALL RETAIN ALL COMMON LAW, STATUTORY AND OTHER RESERVED RIGHTS, INCLUDING REPRODUCIBLE COPIES, OF THE ARCHITECT'S DRAWINGS, SPECIFICATIONS AND OTHER DOCUMENTS FOR INFORMATION AND REFERENCE IN CONNECTION WITH THE OWNER'S USE AND OCCUPANCY OF THE PROJECT. THE ARCHITECT'S DRAWINGS, SPECIFICATIONS OR OTHER DOCUMENTS SHALL NOT BE USED BY THE OWNER OR OTHERS ON OTHER PROJECTS, FOR ADDITIONS TO THIS PROJECT OR FOR COMPLETION OF THIS PROJECT BY OTHERS, UNLESS THE ARCHITECT IS ADJUDGED TO BE IN DEFAULT UNDER THIS AGREEMENT, EXCEPT BY AGREEMENT IN WRITING AND WITH APPROPRIATE COMPENSATION TO THE ARCHITECT.

NO.	DATE	REVISION/SUBMISSION
1	11/12/04	FIRE MARSHAL AND C.P. REVISIONS

McKINLEY MIDDLE MAGNET SCHOOL

1550 EDDIE ROBINSON SR. DRIVE
BATON ROUGE, LOUISIANA 70802

Robert M. Coleman & Partners Architects A.I.A.
3377 North Boulevard
Baton Rouge, Louisiana 70806 U.S.A.
tel 225.387.4414
fax 225.387.4693

BUILDING SECTIONS

PROJECT NO. 0304B	SHEET NO.. A7.1
DRAWN BY CS, BH	
CHECKED BY JS	
DATE October 15, 2004	OF

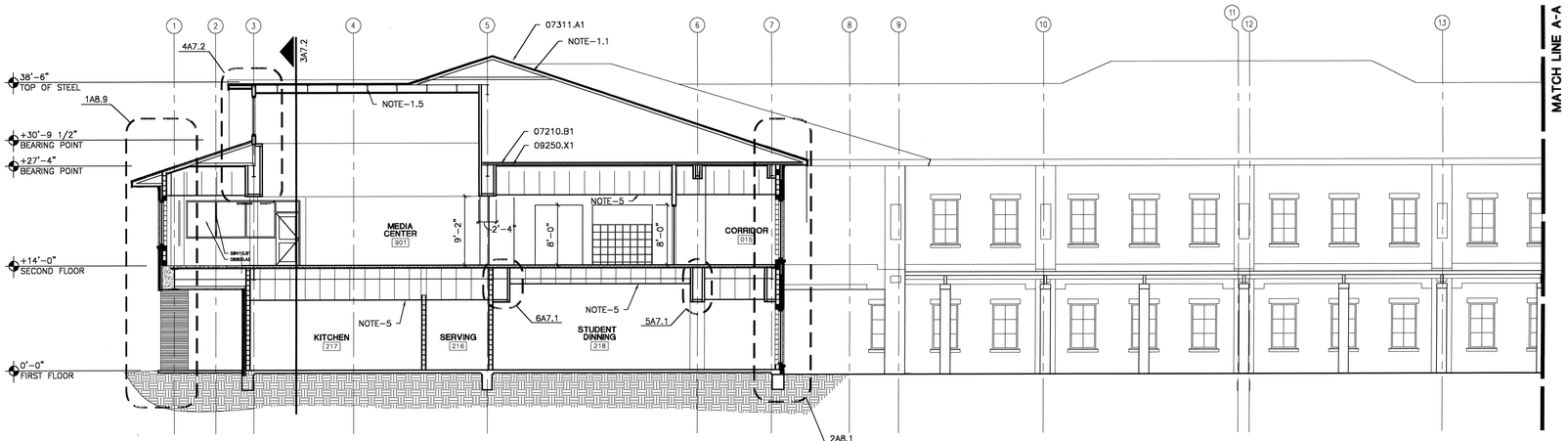

1 BUILDING SECTION - WEST ELEVATION
SCALE: 1/8" = 1'-0"

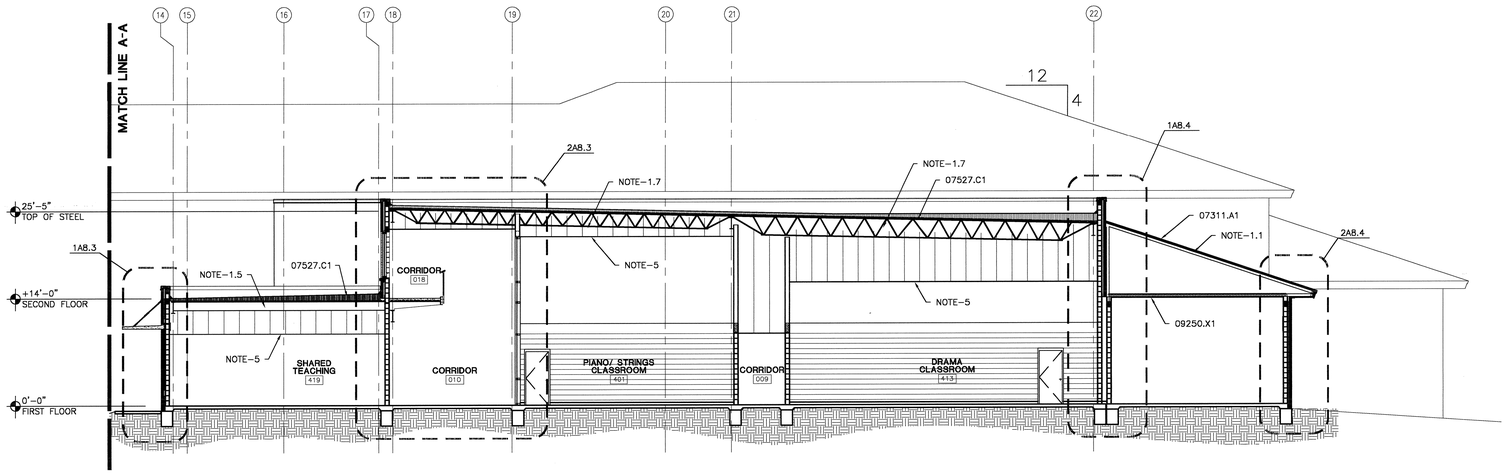

2 BUILDING SECTION - CORRIDOR 010

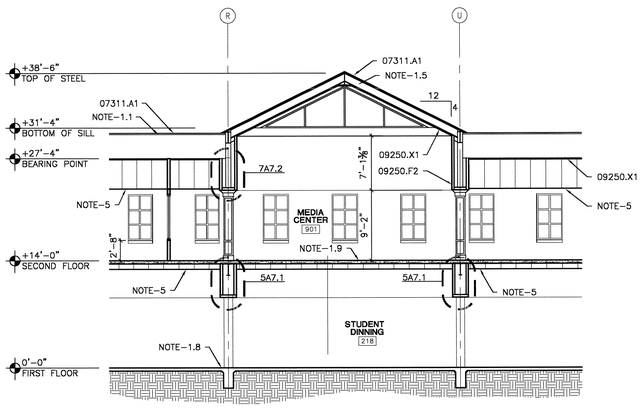

3 BUILDING SECTION - MEDIA CENTER
SCALE: 1/8" = 1'-0"

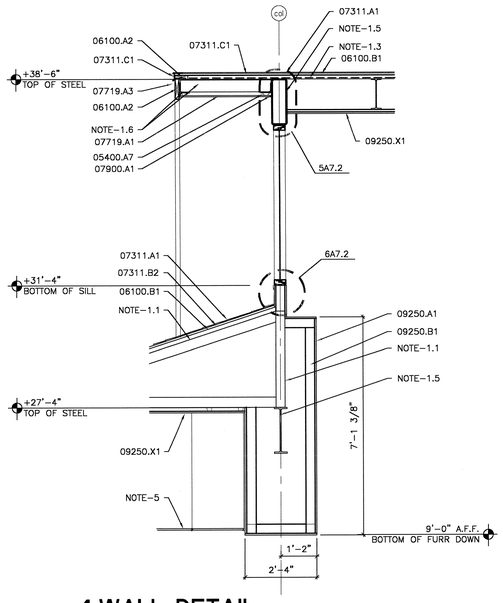

4 WALL DETAIL
SCALE: 1/2" = 1'-0"

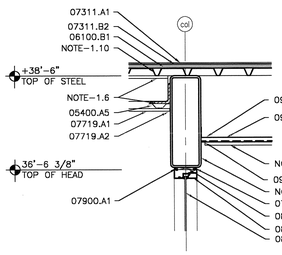

5 WALL DETAIL
SCALE: 1" = 1'-0"

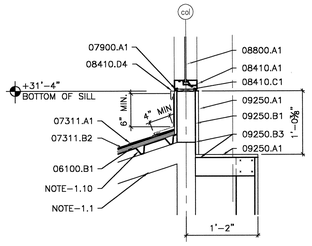

6 WALL DETAIL
SCALE: 1" = 1'-0"

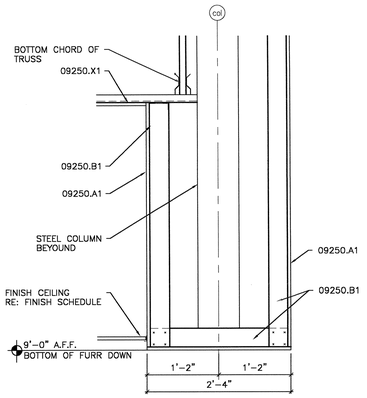

7 WALL DETAIL
SCALE: 1" = 1'-0"

0 4' 8' 16'

MATERIAL KEYNOTES

05400.A5	7/8" – 20 GA. FURRING CHANNEL
05400.A7	7/8" HAT CHANNELS @ 24" O. C. VER
06100.A2	PRESSURE TREATED 2X WOOD BLOCKING
06100.B1	3/4" PLYWOOD SHEATHING
07210.B1	LOOSE FILL INSULATION R-30 MINIMUM
07311.A1	ASPHALT SHINGLES
07311.B2	2 LAYERS OF #15 ASPHALT SATURATED FELT
07311.C1	PREFINISHED METAL DRIP
07527.C1	NSULATION BOARD – MULTI-LAYERED
07719.A1	PREFINISHED METAL SOFFIT PANEL
07719.A2	PREFINISH "J" CLOSURE TO MATCH PANEL
07719.A3	PREFINISHED METAL FASCIA MATCH FINISH OF SOFFIT PANEL
07900.A1	BACKER ROD AND SEALANT
08410.A1	ALUMINUM STOREFRONT FRAMING (EXTERIOR WINDOWS)
08410.B1	ALUMINUM STOREFRONT FRAMING (INTERIOR)
08410.C1	NEOPRENE SHIM
08410.D4	EXTRUDED ALUMINUM SILL FLASHING TO MATCH STOREFRONT. EXTEND UP BEHIND STOREFRONT.
08800.A1	1/4" TINTED AND HEAT TREATED FLOAT GLASS
08800.A2	1/4" TEMPERED GLASS – INTERIOR GLAZING
09250.A1	5/8" GYPSUM BOARD
09250.B1	3-5/8" METAL STUDS
09250.B3	METAL STUD TRACK
09250.B5	2-1/2" x 2-1/2" COLD ROLLED ANGLE (20 GA.)
09250.E4	7/8" METAL FURRING CHANNEL @ 16" O.C.
09250.F2	5/8" GYPSUM BOARD FURR-DOWN
09250.G1	EXTRUDED ALUMINUM DRYWALL REVEAL 3/4" – TYPE F" REVEAL
09250.X1	INSTALL 7/8" HAT CHANNELS @ 16 O.C. ON UNDERSIDE OF ALL PRE-ENGINEERED TRUSSES. INSTALL 5/8" GYPSUM BOARD ACROSS ENTIRE UNDERSIDE OF TRUSSES. TAPE AND FLOAT BEFORE ERECTING PARTITIONS TO UNDERSIDE OF GYPSUM BOARD.
NOTE-1.1	PRE-ENGINEERED ROOF TRUSS RE: STRUCTURAL
NOTE-1.10	STEEL DECKING RE: STRUCTURAL
NOTE-1.3	METAL ROOF DECK RE: STRUCTURAL
NOTE-1.5	STEEL BEAM RE: STRUCTURAL
NOTE-1.6	STEEL ANGLE RE: STRUCTURAL
NOTE-1.7	STEEL JOIST RE: STRUCTURAL
NOTE-1.8	FOUNDATION RE: STRUCTURAL
NOTE-1.9	CONCRETE SLAB RE: STRUCTURAL
NOTE-5	RE: REFLECTED CEILING PLAN – ALL SERIES

KEY PLAN

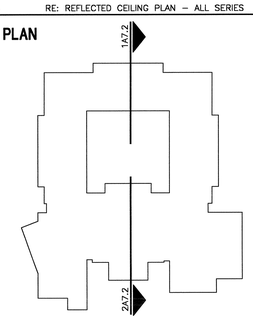

USE OF ARCHITECT'S DRAWINGS, SPECIFICATIONS AND OTHER DOCUMENTS

THE DRAWINGS, SPECIFICATIONS AND OTHER DOCUMENTS PREPARED BY THE ARCHITECT FOR THIS PROJECT ARE INSTRUMENTS OF THE ARCHITECT'S SERVICE FOR USE SOLELY WITH RESPECT TO THIS PROJECT AND, UNLESS OTHERWISE PROVIDED, THE ARCHITECT SHALL BE DEEMED THE AUTHOR OF THESE DOCUMENTS AND SHALL RETAIN ALL COMMON LAW, STATUTORY AND OTHER RESERVED RIGHTS, INCLUDING REPRODUCIBLE COPIES, OF THE ARCHITECT'S DRAWINGS, SPECIFICATIONS AND OTHER DOCUMENTS FOR INFORMATION AND REFERENCE IN CONNECTION WITH THE OWNER'S USE AND OCCUPANCY OF THE PROJECT. THE ARCHITECT'S DRAWINGS, SPECIFICATIONS OR OTHER DOCUMENTS SHALL NOT BE USED BY THE OWNER OR OTHERS ON OTHER PROJECTS, FOR ADDITIONS TO THIS PROJECT OR FOR COMPLETION OF THIS PROJECT BY OTHERS, UNLESS THE ARCHITECT IS ADJUDGED TO BE IN DEFAULT UNDER THIS AGREEMENT, EXCEPT BY AGREEMENT IN WRITING AND WITH APPROPRIATE COMPENSATION TO THE ARCHITECT.

NO.	DATE	REVISION/SUBMISSION
1	11/12/04	FIRE MARSHAL AND C.P. REVISIONS

McKINLEY MIDDLE MAGNET SCHOOL

1550 EDDIE ROBINSON SR. DRIVE
BATON ROUGE, LOUISIANA 70802

Robert M. Coleman & Partners Architects A.I.A.
3377 North Boulevard
Baton Rouge, Louisiana 70806
U.S.A.
tel 225.387.4414
fax 225.387.4693

BUILDING SECTIONS/ DETAILS

PROJECT NO. 03048	SHEET NO.. A7.2
DRAWN BY CS, BH	
CHECKED BY JS	
DATE October 15, 2004	OF

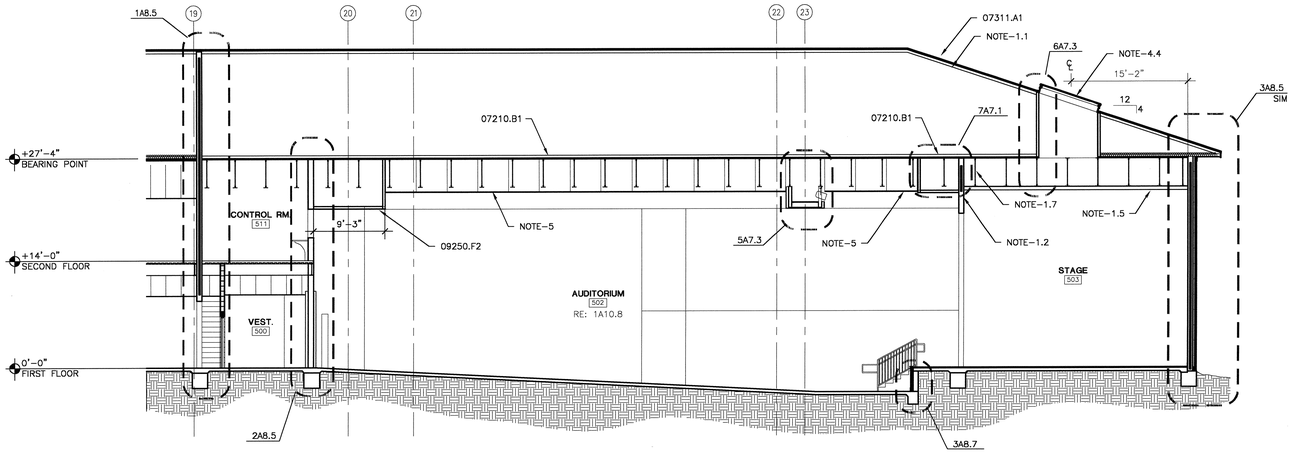

1 BUILDING SECTION - AUDITORIUM

SCALE: 1/8" = 1'-0"

0 4' 8' 16'

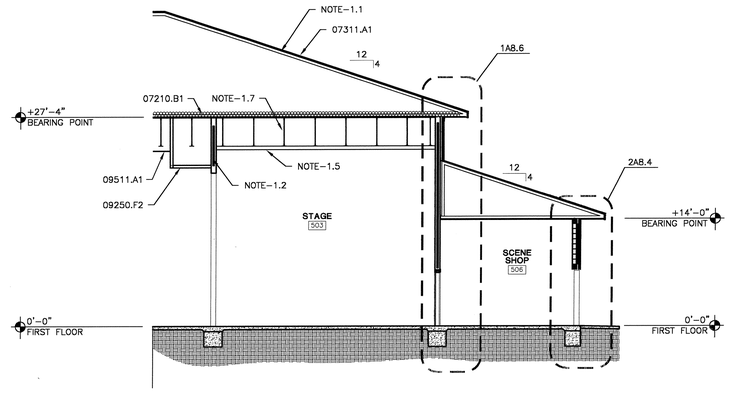

2 BUILDING SECTION - AUDITORIUM

SCALE: 1/8" = 1'-0"

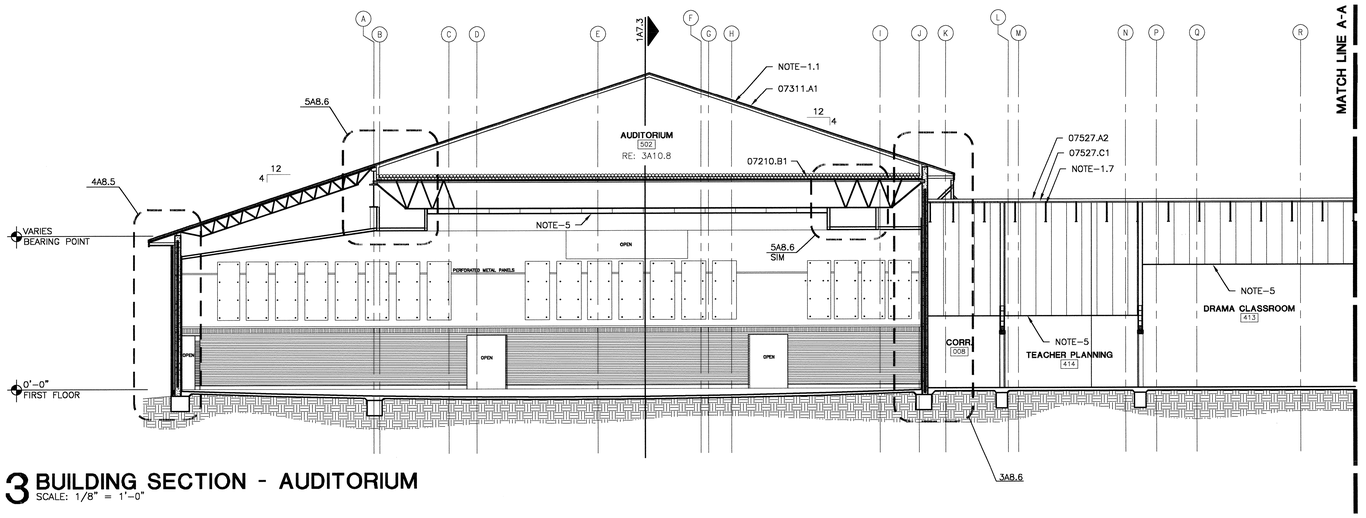

3 BUILDING SECTION - AUDITORIUM

SCALE: 1/8" = 1'-0"

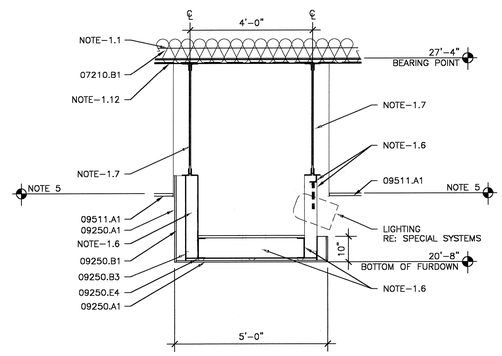

5 CATWALK SECTION

SCALE: 1/2" = 1'-0"

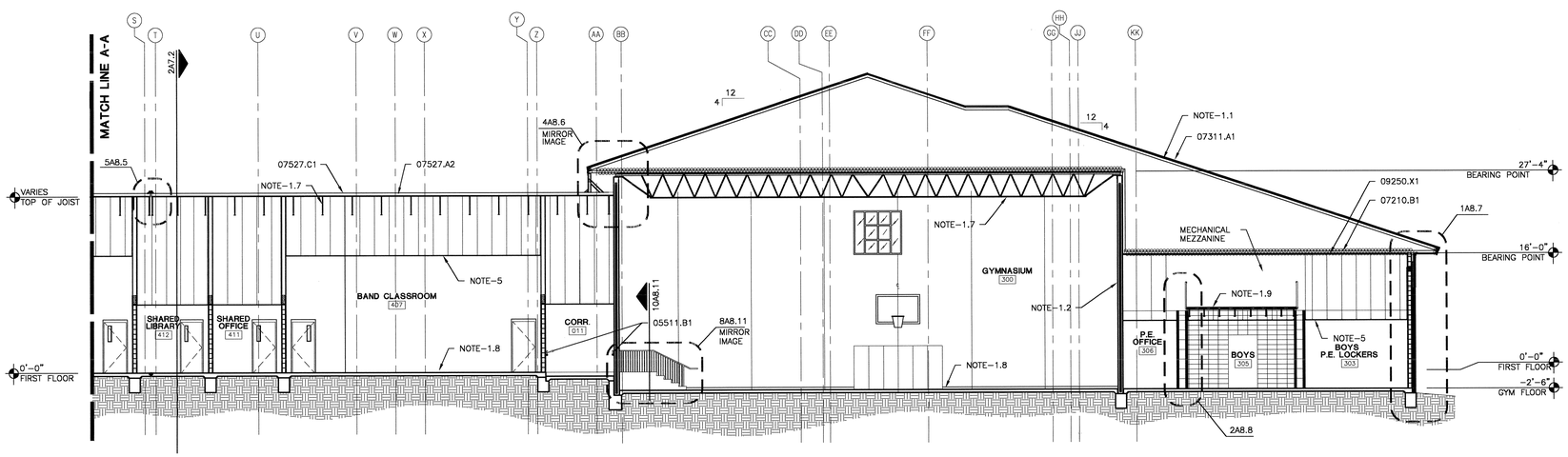

4 BUILDING SECTION - GYMNASIUM

SCALE: 1/8" = 1'-0"

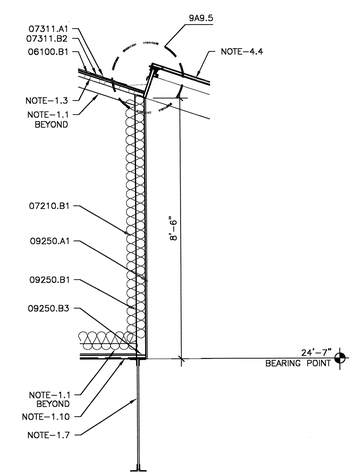

6 WALL DETAIL

SCALE: 1/2" = 1'-0"

MATERIAL KEYNOTES

05511.B1	1 1/2" O.D. STEEL HANDRAIL WALL MOUNTED
06100.B1	3/4" PLYWOOD SHEATHING
07210.B1	LOOSE FILL INSULATION R-30 MINIMUM
07311.A1	ASPHALT SHINGLES
07311.B2	2 LAYERS OF #15 ASPHALT SATURATED FELT
07527.A2	SBS-MODIFIED BITUMEN CAPSHEET
07527.C1	NSULATION BOARD – MULTI-LAYERED
09250.A1	5/8" GYPSUM BOARD
09250.B1	3-5/8" METAL STUDS
09250.B3	METAL STUD TRACK
09250.E4	7/8" METAL FURRING CHANNEL @ 16" O.C.
09250.F2	5/8" GYPSUM BOARD FURR-DOWN
09250.X1	INSTALL 7/8" HAT CHANNELS @ 16 O.C. ON UNDERSIDE OF ALL PRE-ENGINEERED TRUSSES. INSTALL 5/8" GYPSUM BOARD ACROSS ENTIRE UNDERSIDE OF TRUSSES. TAPE AND FLOAT BEFORE ERECTING PARTITIONS TO UNDERSIDE OF GYPSUM BOARD.
09511.A1	SUSPENDED 2 X 2 ACOUSTICAL CEILING TILE
NOTE-1.1	PRE-ENGINEERED ROOF TRUSS RE: STRUCTURAL
NOTE-1.10	STEEL DECKING RE: STRUCTURAL
NOTE-1.12	STEEL CHANNEL RE: STRUCTURAL
NOTE-1.2	PRECAST CONCRETE PANEL RE: STRUCTURAL
NOTE-1.3	METAL ROOF DECK RE: STRUCTURAL
NOTE-1.5	STEEL BEAM RE: STRUCTURAL
NOTE-1.6	STEEL ANGLE RE: STRUCTURAL
NOTE-1.7	STEEL JOIST RE: STRUCTURAL
NOTE-1.8	FOUNDATION RE: STRUCTURAL
NOTE-1.9	CONCRETE SLAB RE: STRUCTURAL
NOTE-4.4	SMOKE VENT RE: MECHANICAL
NOTE-5	RE: REFLECTED CEILING PLAN – ALL SERIES

KEY PLAN

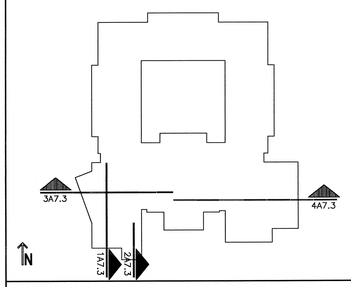

USE OF ARCHITECT'S DRAWINGS, SPECIFICATIONS AND OTHER DOCUMENTS

THE DRAWINGS, SPECIFICATIONS AND OTHER DOCUMENTS PREPARED BY THE ARCHITECT FOR THIS PROJECT ARE INSTRUMENTS OF THE ARCHITECT'S SERVICE FOR USE SOLELY WITH RESPECT TO THIS PROJECT AND, UNLESS OTHERWISE PROVIDED, THE ARCHITECT SHALL BE DEEMED THE AUTHOR OF THESE DOCUMENTS AND SHALL RETAIN ALL COMMON LAW, STATUTORY AND OTHER RESERVED RIGHTS, INCLUDING REPRODUCIBLE COPIES, OF THE ARCHITECT'S DRAWINGS, SPECIFICATIONS AND OTHER DOCUMENTS FOR INFORMATION AND REFERENCE IN CONNECTION WITH THE OWNER'S USE AND OCCUPANCY OF THE PROJECT. THE ARCHITECT'S DRAWINGS, SPECIFICATIONS OR OTHER DOCUMENTS SHALL NOT BE USED BY THE OWNER OR OTHERS ON OTHER PROJECTS, FOR ADDITIONS TO THIS PROJECT OR FOR COMPLETION OF THIS PROJECT BY OTHERS, UNLESS THE ARCHITECT IS ADJUDGED TO BE IN DEFAULT UNDER THIS AGREEMENT, EXCEPT BY AGREEMENT IN WRITING AND WITH APPROPRIATE COMPENSATION TO THE ARCHITECT.

NO.	DATE	REVISION/SUBMISSION
1	11/12/04	FIRE MARSHAL AND C.P. REVISIONS

McKINLEY MIDDLE MAGNET SCHOOL

1550 EDDIE ROBINSON SR. DRIVE
BATON ROUGE, LOUISIANA 70802

Robert M. Coleman & Partners Architects A.I.A.
3377 North Boulevard
Baton Rouge, Louisiana 70806
U.S.A.
tel 225.387.4414
fax 225.387.4693

BUILDING SECTIONS

PROJECT NO. 03048	SHEET NO.. A7.3
DRAWN BY CS, BH	
CHECKED BY JS	
DATE October 15, 2004	OF

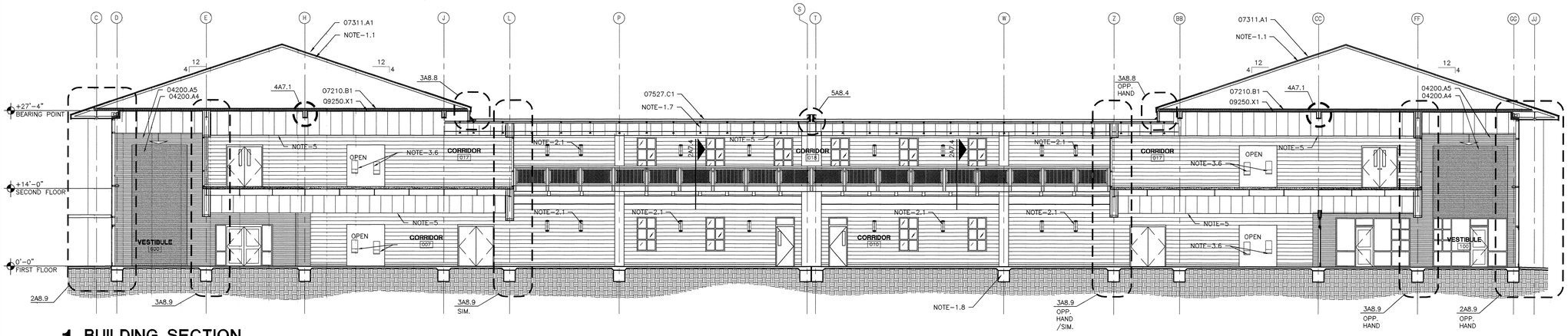

1 BUILDING SECTION
SCALE: 1/8" = 1'-0"

NOTE:
PERFORATED METAL PANEL TO BE CLEAR ANODIZED ALUMINUM SHEETS WITH 1" sq. OPENINGS @ 2" o.c. IN EACH DIRECTION. SHEETS TO BE .1265" THICK WITH A 2" MARGIN AROUND THE PERIMETER.

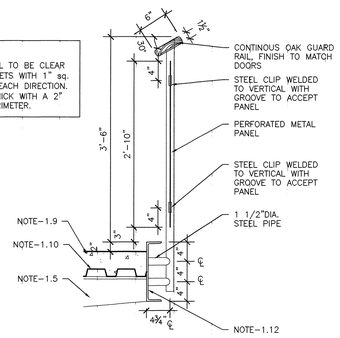

2 RAILING DETAIL
SCALE: 1" = 1'-0"

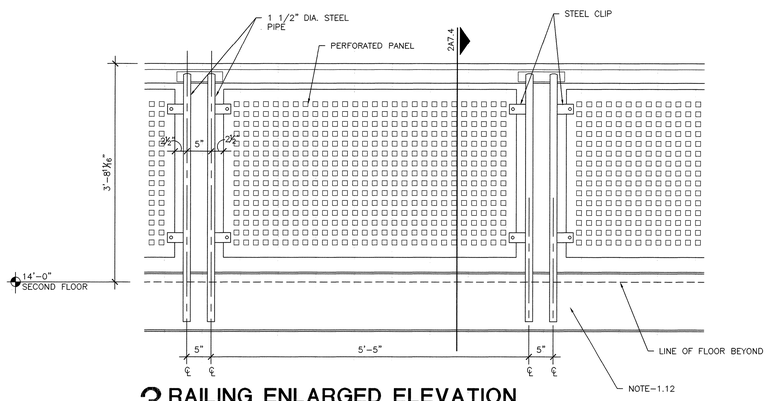

3 RAILING ENLARGED ELEVATION
SCALE: 1" = 1'-0"

MATERIAL KEYNOTES

04200.A4	4" FACE BRICK – ACCENT COLOR
04200.A5	4" FACE BRICK – FIELD COLOR
07210.B1	LOOSE FILL INSULATION R-30 MINIMUM
07311.A1	ASPHALT SHINGLES
07527.C1	NSULATION BOARD – MULTI-LAYERED
09250.X1	INSTALL 7/8" HAT CHANNELS @ 16 O.C. ON UNDERSIDE OF ALL PRE-ENGINEERED TRUSSES. INSTALL 5/8" GYPSUM BOARD ACROSS ENTIRE UNDERSIDE OF TRUSSES. TAPE AND FLOAT BEFORE ERECTING PARTITIONS TO UNDERSIDE OF GYPSUM BOARD.
NOTE-1.1	PRE-ENGINEERED ROOF TRUSS RE: STRUCTURAL
NOTE-1.10	STEEL DECKING RE: STRUCTURAL
NOTE-1.12	STEEL CHANNEL RE: STRUCTURAL
NOTE-1.5	STEEL BEAM RE: STRUCTURAL
NOTE-1.7	STEEL JOIST RE: STRUCTURAL
NOTE-1.8	FOUNDATION RE: STRUCTURAL
NOTE-1.9	CONCRETE SLAB RE: STRUCTURAL
NOTE-2.1	LIGHT FIXTURE RE: ELECTRICAL
NOTE-3.6	DRINKING FOUNTAIN RE: PLUMBING
NOTE-5	RE: REFLECTED CEILING PLAN – ALL SERIES

KEY PLAN

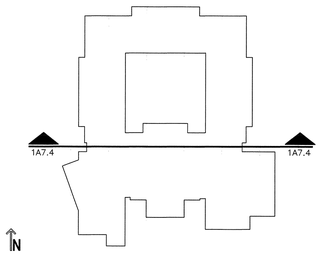

USE OF ARCHITECT'S DRAWINGS, SPECIFICATIONS AND OTHER DOCUMENTS

THE DRAWINGS, SPECIFICATIONS AND OTHER DOCUMENTS PREPARED BY THE ARCHITECT FOR THIS PROJECT ARE INSTRUMENTS OF THE ARCHITECT'S SERVICE FOR USE SOLELY WITH RESPECT TO THIS PROJECT AND, UNLESS OTHERWISE PROVIDED, THE ARCHITECT SHALL BE DEEMED THE AUTHOR OF THESE DOCUMENTS AND SHALL RETAIN ALL COMMON LAW, STATUTORY AND OTHER RESERVED RIGHTS, INCLUDING REPRODUCIBLE COPIES, OF THE ARCHITECT'S DRAWINGS, SPECIFICATIONS AND OTHER DOCUMENTS FOR INFORMATION AND REFERENCE IN CONNECTION WITH THE OWNER'S USE AND OCCUPANCY OF THE PROJECT. THE ARCHITECT'S DRAWINGS, SPECIFICATIONS OR OTHER DOCUMENTS SHALL NOT BE USED BY THE OWNER OR OTHERS ON OTHER PROJECTS, FOR ADDITIONS TO THIS PROJECT OR FOR COMPLETION OF THIS PROJECT BY OTHERS, UNLESS THE ARCHITECT IS ADJUDGED TO BE IN DEFAULT UNDER THIS AGREEMENT, EXCEPT BY AGREEMENT IN WRITING AND WITH APPROPRIATE COMPENSATION TO THE ARCHITECT.

NO.	DATE	REVISION/SUBMISSION
1	11/12/04	FIRE MARSHAL AND C.P. REVISIONS

McKINLEY MIDDLE MAGNET SCHOOL

1550 EDDIE ROBINSON SR. DRIVE
BATON ROUGE, LOUISIANA 70802

Robert M. Coleman & Partners Architects A.I.A.
3377 North Boulevard
Baton Rouge, Louisiana 70806
U.S.A.
tel 225.387.4414
fax 225.387.4693

BUILDING SECTIONS

PROJECT NO.	03048
DRAWN BY	CS
CHECKED BY	JS
DATE	October 15, 2004
SHEET NO..	A7.4
	OF

0 4' 8' 16'

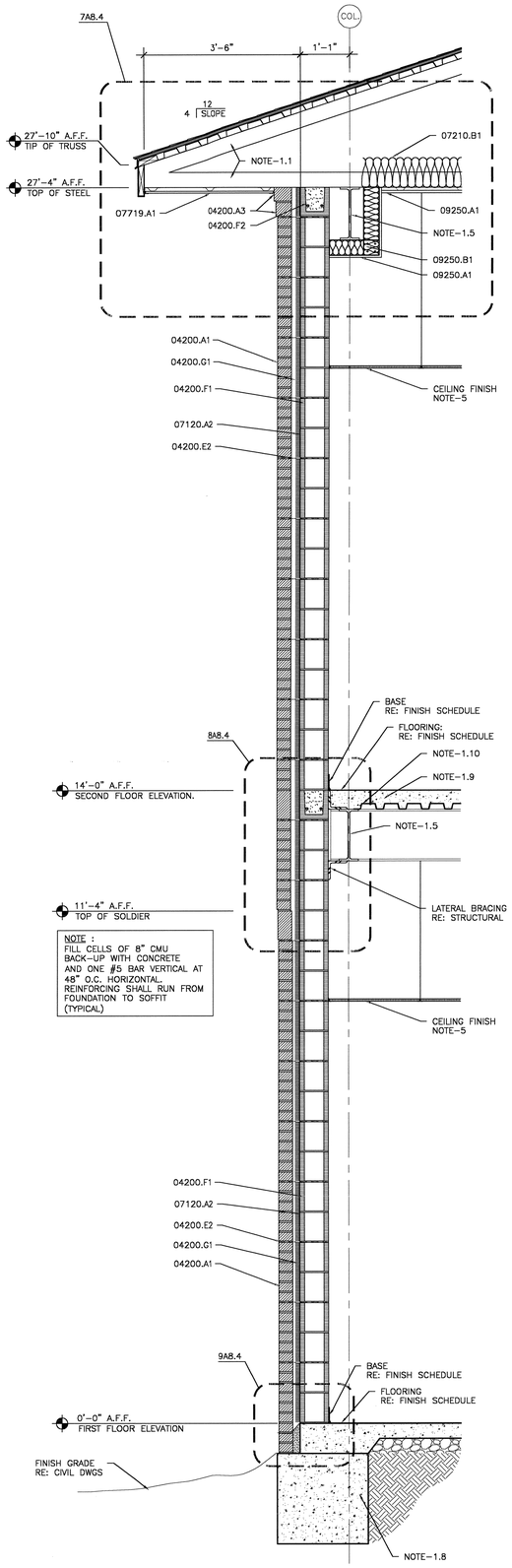

1 WALL SECTION AT HIGH EAVE
SCALE: 3/4" = 1'-0"

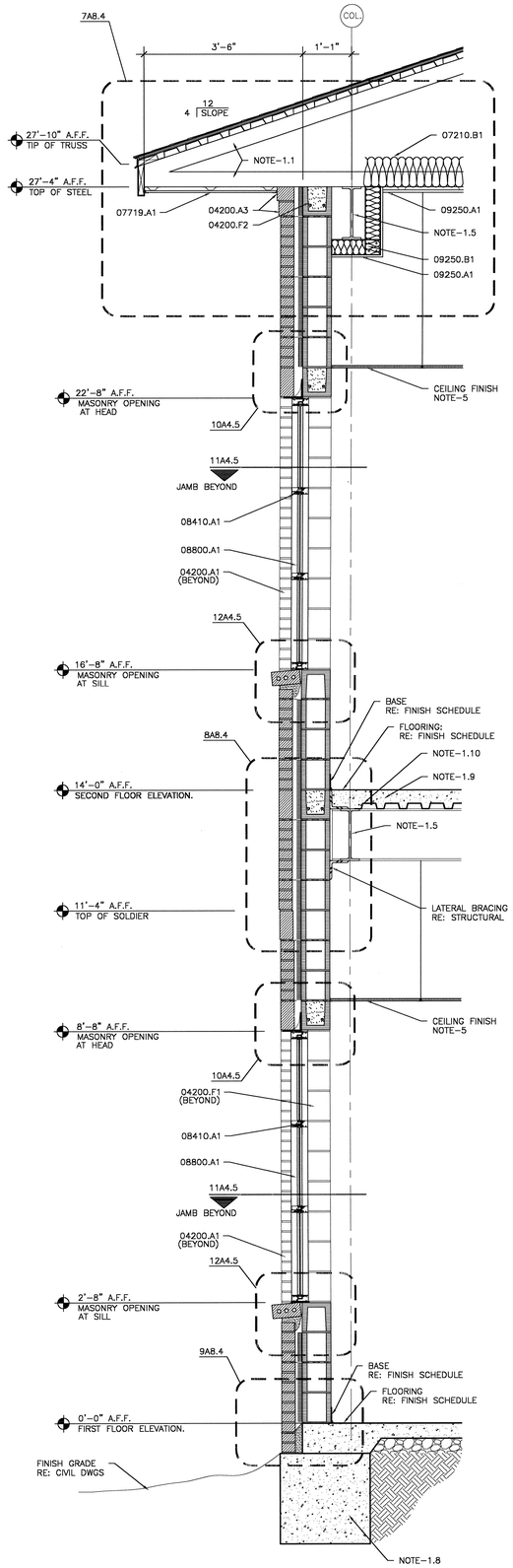

2 WALL SECTION AT WINDOWS HIGH EAVE
SCALE: 3/4" = 1'-0"

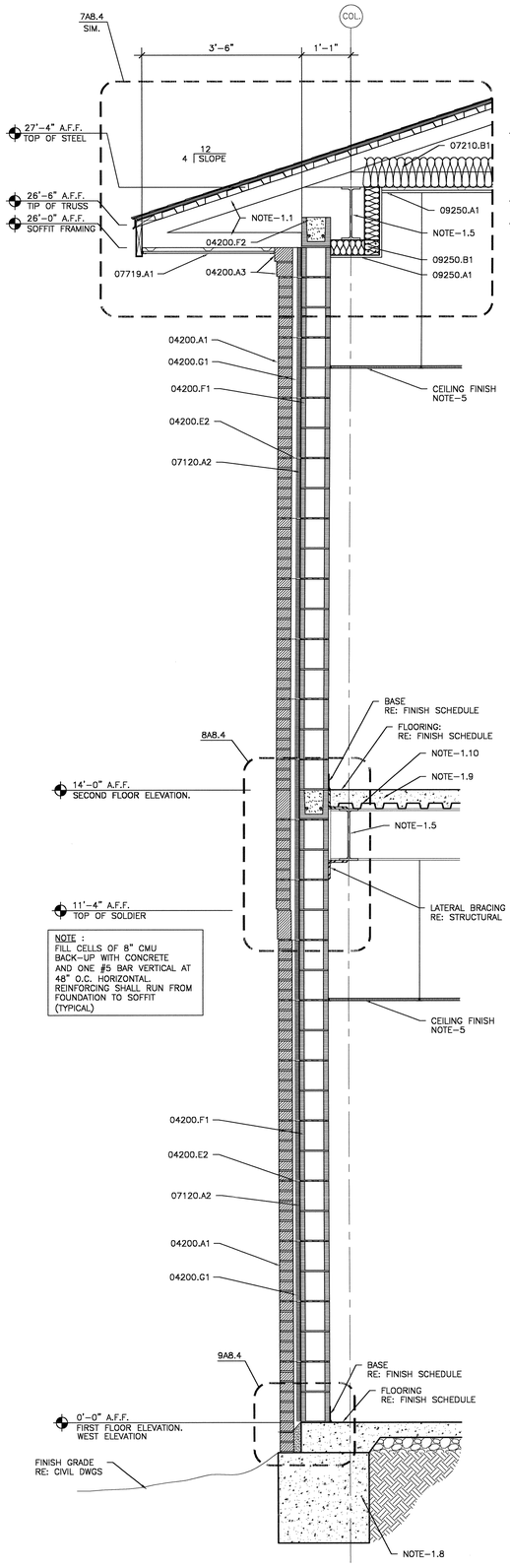

3 WALL SECTION AT LOW EAVE
SCALE: 3/4" = 1'-0"

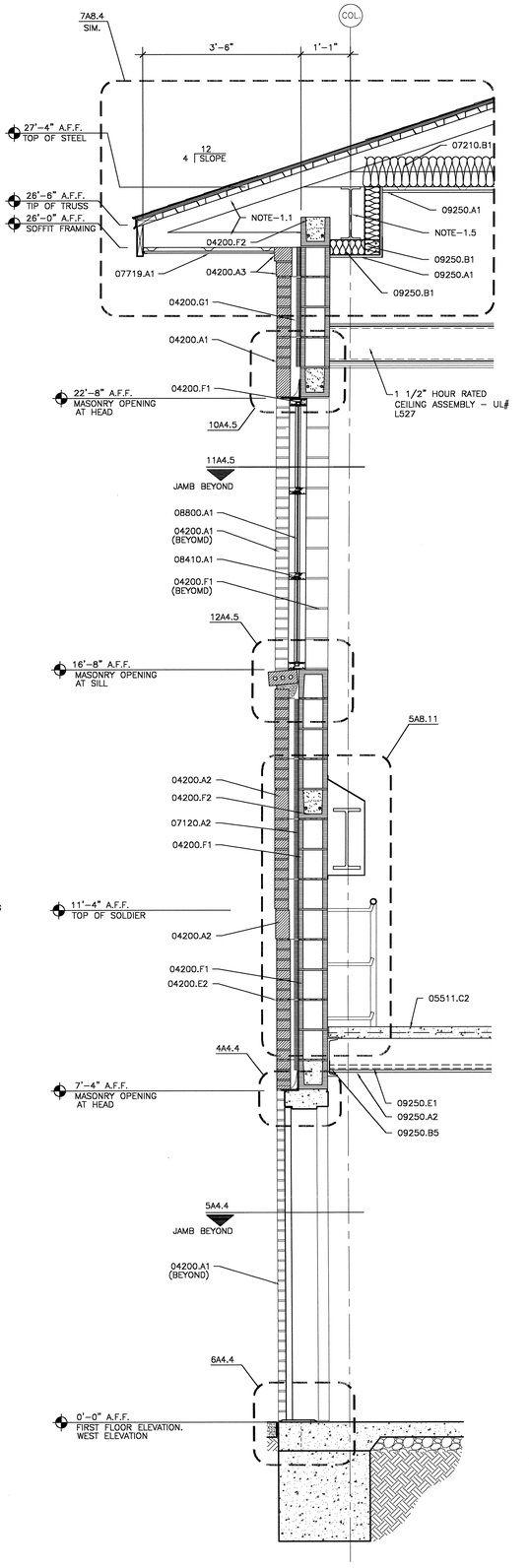

4 WALL SECTION AT STAIRS
SCALE: 3/4" = 1'-0"

MATERIAL KEYNOTES

04200.A1	4" VENEER FACE BRICK RE: ELEVATIONS AND DETAILS FOR LOCATIONS OF ACCENT COLORS OF BRICK
04200.A2	SOLDIER COURSE
04200.A3	ROWLOCK COURSE
04200.E2	TWO PIECE LADDER TYPE HORIZONTAL REINFORCING WITH ADJUSTABLE EYE AND WIRE TIE
04200.F1	8 X 8 X 16 CONCRETE MASONRY UNITS
04200.F2	CONCRETE MASONRY U-BLOCK CONCRETE FILLED WITH 2- #5 REBAR CONT.
04200.G1	CAVITY WALL INSULATION
05511.C2	CONCRETE FILLED METAL STAIR LANDING
07120.A2	FLUID APPLIED WATERPROOFING OVER CMU
07210.B1	LOOSE FILL INSULATION R-30 MINIMUM
07719.A1	PREFINISHED METAL SOFFIT PANEL
08410.A1	ALUMINUM STOREFRONT FRAMING (EXTERIOR WINDOWS)
08800.A1	1/4" TINTED AND HEAT TREATED FLOAT GLASS
09250.A1	5/8" GYPSUM BOARD
09250.A2	5/8" IMPACT RESISTANT GYPSUM BOARD
09250.B1	3-5/8" METAL STUDS
09250.B5	2-1/2" x 2-1/2" COLD ROLLED ANGLE (20 GA.)
09250.E1	1-1/2" METAL FURRING CHANNEL @ 16" O.C.
NOTE-1.1	PRE-ENGINEERED ROOF TRUSS RE: STRUCTURAL
NOTE-1.10	STEEL DECKING RE: STRUCTURAL
NOTE-1.5	STEEL BEAM RE: STRUCTURAL
NOTE-1.8	FOUNDATION RE: STRUCTURAL
NOTE-1.9	CONCRETE SLAB RE: STRUCTURAL
NOTE-5	RE: REFLECTED CEILING PLAN - ALL SERIES

KEY PLAN

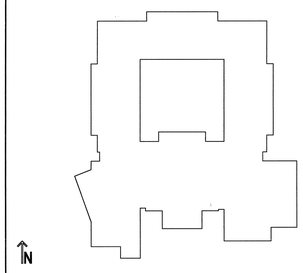

USE OF ARCHITECT'S DRAWINGS, SPECIFICATIONS AND OTHER DOCUMENTS

THE DRAWINGS, SPECIFICATIONS AND OTHER DOCUMENTS PREPARED BY THE ARCHITECT FOR THIS PROJECT ARE INSTRUMENTS OF THE ARCHITECT'S SERVICE FOR USE SOLELY WITH RESPECT TO THIS PROJECT AND, UNLESS OTHERWISE PROVIDED, THE ARCHITECT SHALL BE DEEMED THE AUTHOR OF THESE DOCUMENTS AND SHALL RETAIN ALL COMMON LAW, STATUTORY AND OTHER RESERVED RIGHTS, INCLUDING REPRODUCIBLE COPIES, OF THE ARCHITECT'S DRAWINGS, SPECIFICATIONS AND OTHER DOCUMENTS FOR INFORMATION AND REFERENCE IN CONNECTION WITH THE OWNER'S USE AND OCCUPANCY OF THE PROJECT. THE ARCHITECT'S DRAWINGS, SPECIFICATIONS OR OTHER DOCUMENTS SHALL NOT BE USED BY THE OWNER OR OTHERS ON OTHER PROJECTS, FOR ADDITIONS TO THIS PROJECT OR FOR COMPLETION OF THIS PROJECT BY OTHERS, UNLESS THE ARCHITECT IS ADJUDGED TO BE IN DEFAULT UNDER THIS AGREEMENT, EXCEPT BY AGREEMENT IN WRITING AND WITH APPROPRIATE COMPENSATION TO THE ARCHITECT.

NO.	DATE	REVISION/SUBMISSION
1	11/12/04	FIRE MARSHAL AND C.P. REVISIONS

McKINLEY MIDDLE MAGNET SCHOOL

1550 EDDIE ROBINSON SR. DRIVE
BATON ROUGE, LOUISIANA 70802

Robert M. Coleman & Partners Architects A.I.A.
3377 North Boulevard
Baton Rouge, Louisiana 70806
U.S.A.
tel 225.387.4414
fax 225.387.4693

WALL SECTIONS

PROJECT NO. 0304B	SHEET NO.. A8.1
DRAWN BY BH, JM, CS	
CHECKED BY JS	
DATE October 15, 2004	OF

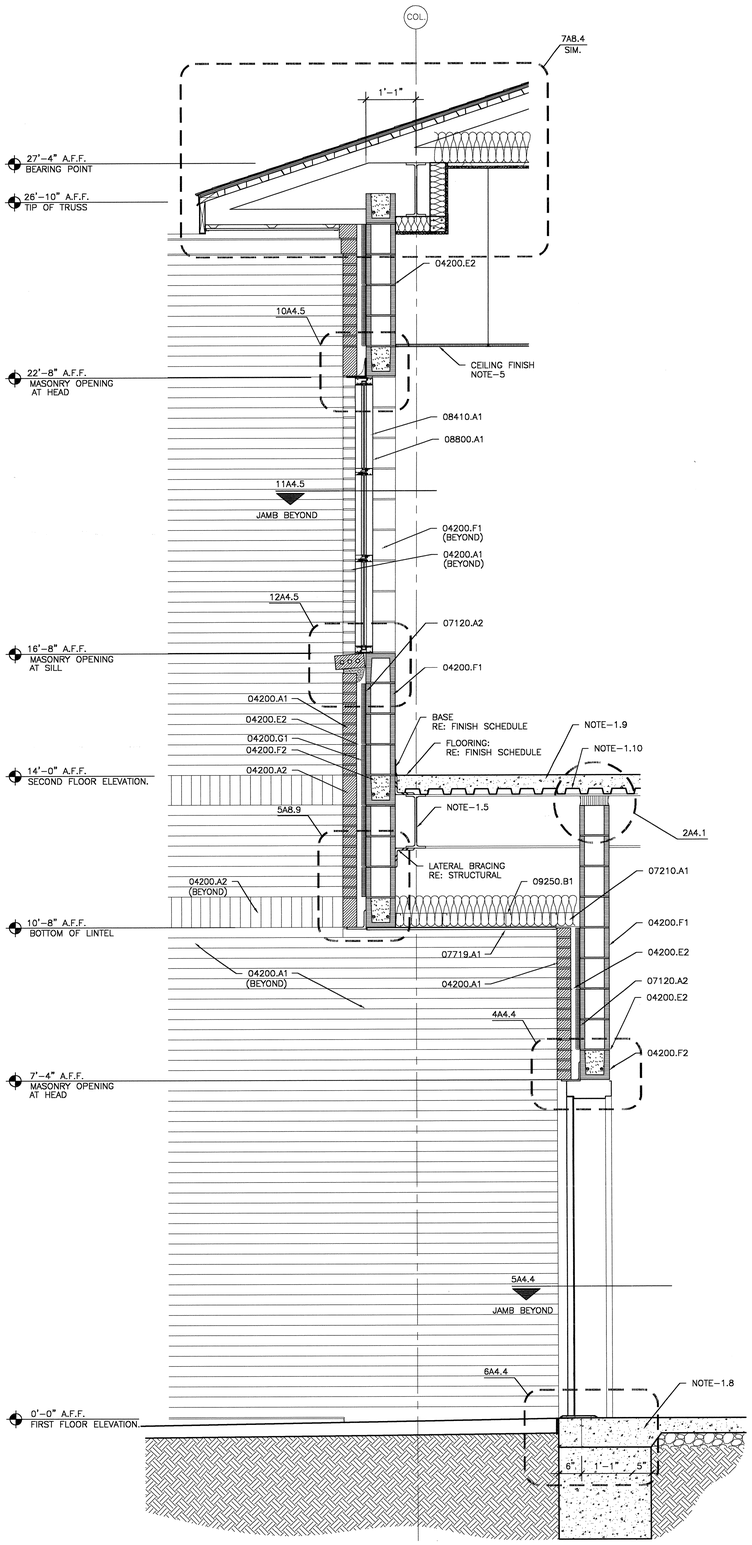

1 WALL SECTION
SCALE: 3/4" = 1'-0"

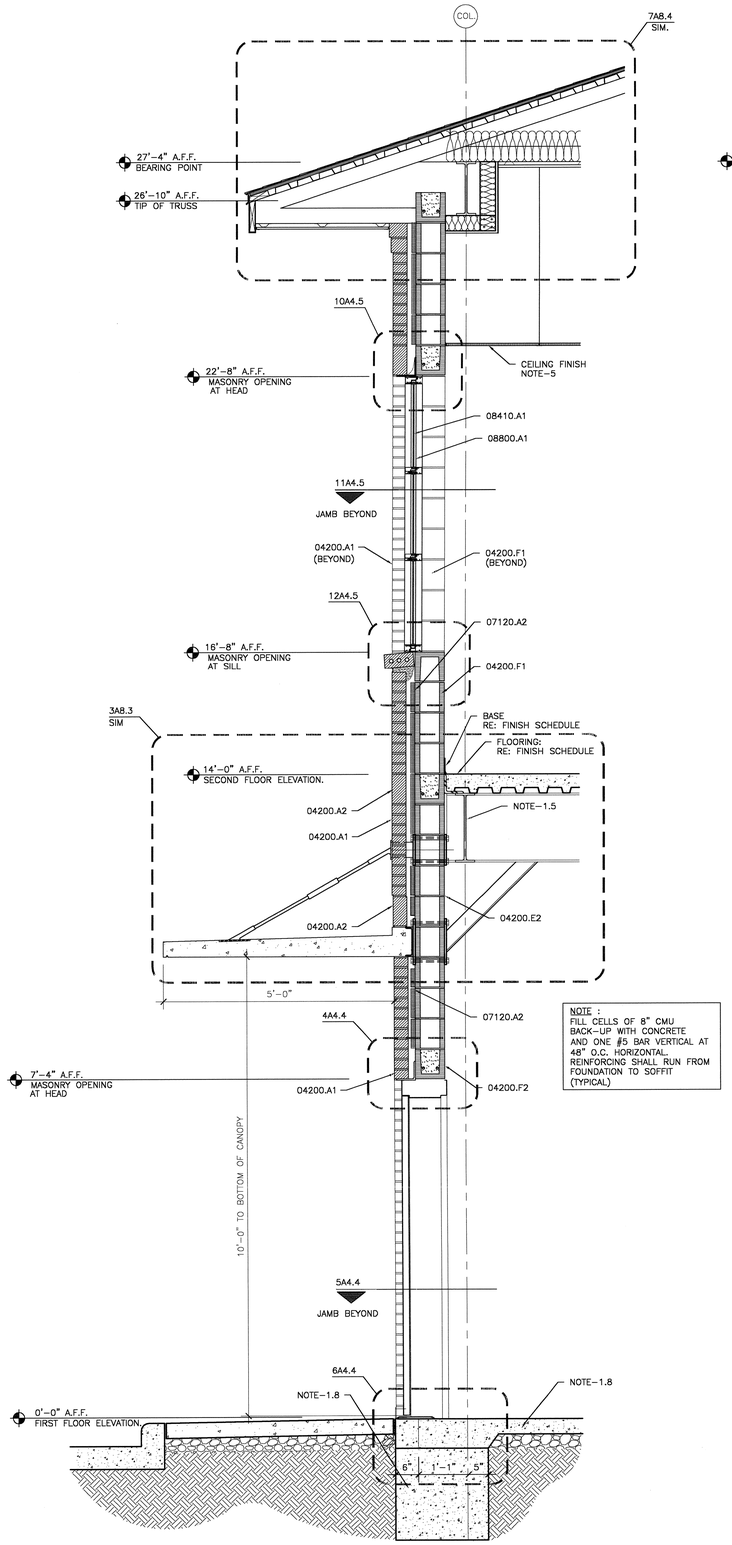

2 WALL SECTION
SCALE: 3/4" = 1'-0"

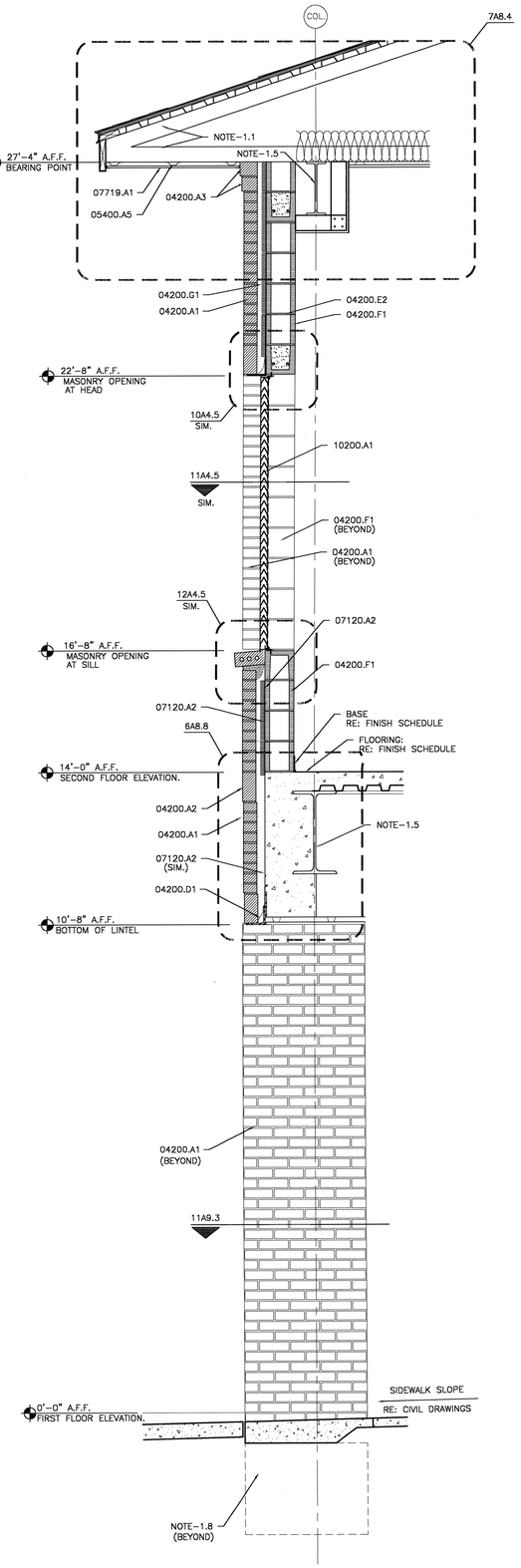

3 WALL SECTION
SCALE: 3/4" = 1'-0"

MATERIAL KEYNOTES

04200.A1	4" VENEER FACE BRICK RE: ELEVATIONS AND DETAILS FOR LOCATIONS OF ACCENT COLORS OF BRICK
04200.A2	SOLDIER COURSE
04200.A3	ROWLOCK COURSE
04200.D1	COPPER FABRIC THRU-WALL FLASHING
04200.E2	TWO PIECE LADDER TYPE HORIZONTAL REINFORCING WITH ADJUSTABLE EYE AND WIRE TIE
04200.F1	8 X 8 X 16 CONCRETE MASONRY UNITS
04200.F2	CONCRETE MASONRY U-BLOCK CONCRETE FILLED WITH 2- #5 REBAR CONT.
04200.G1	CAVITY WALL INSULATION
05400.A5	7/8" - 20 GA. FURRING CHANNEL
07120.A2	FLUID APPLIED WATERPROOFING OVER CMU
07210.A1	8" BATT. INSULATION
07719.A1	PREFINISHED METAL SOFFIT PANEL
08410.A1	ALUMINUM STOREFRONT FRAMING (EXTERIOR WINDOWS)
08800.A1	1/4" TINTED AND HEAT TREATED FLOAT GLASS
09250.B1	3-5/8" METAL STUDS
10200.A1	EXTRUDED ALUMINUM LOUVER
NOTE-1.1	PRE-ENGINEERED ROOF TRUSS RE: STRUCTURAL
NOTE-1.10	STEEL DECKING RE: STRUCTURAL
NOTE-1.5	STEEL BEAM RE: STRUCTURAL
NOTE-1.8	FOUNDATION RE: STRUCTURAL
NOTE-1.9	CONCRETE SLAB RE: STRUCTURAL
NOTE-5	RE: REFLECTED CEILING PLAN - A11 SERIES

KEY PLAN

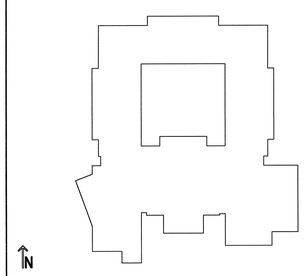

USE OF ARCHITECT'S DRAWINGS, SPECIFICATIONS AND OTHER DOCUMENTS

THE DRAWINGS, SPECIFICATIONS AND OTHER DOCUMENTS PREPARED BY THE ARCHITECT FOR THIS PROJECT ARE INSTRUMENTS OF THE ARCHITECT'S SERVICE FOR USE SOLELY WITH RESPECT TO THIS PROJECT AND, UNLESS OTHERWISE PROVIDED, THE ARCHITECT SHALL BE DEEMED THE AUTHOR OF THESE DOCUMENTS AND SHALL RETAIN ALL COMMON LAW, STATUTORY AND OTHER RESERVED RIGHTS, INCLUDING REPRODUCIBLE COPIES, OF THE ARCHITECT'S DRAWINGS, SPECIFICATIONS AND OTHER DOCUMENTS FOR INFORMATION AND REFERENCE IN CONNECTION WITH THE OWNER'S USE AND OCCUPANCY OF THE PROJECT. THE ARCHITECT'S DRAWINGS, SPECIFICATIONS OR OTHER DOCUMENTS SHALL NOT BE USED BY THE OWNER OR OTHERS ON OTHER PROJECTS, FOR ADDITIONS TO THIS PROJECT OR FOR COMPLETION OF THIS PROJECT BY OTHERS, UNLESS THE ARCHITECT IS ADJUDGED TO BE IN DEFAULT UNDER THIS AGREEMENT, EXCEPT BY AGREEMENT IN WRITING AND WITH APPROPRIATE COMPENSATION TO THE ARCHITECT.

NO.	DATE	REVISION/SUBMISSION
1	11/12/04	FIRE MARSHAL AND C.P. REVISIONS

McKINLEY MIDDLE MAGNET SCHOOL

1550 EDDIE ROBINSON SR. DRIVE
BATON ROUGE, LOUISIANA 70802

Robert M. Coleman & Partners Architects A.I.A.
3377 North Boulevard
Baton Rouge, Louisiana
70805
U.S.A.
tel 225.387.4414
fax 225.387.4693

WALL SECTIONS

PROJECT NO. 0304B	SHEET NO.. A8.2
DRAWN BY CS, BH, JM	
CHECKED BY JS	
DATE October 15, 2004	____ OF ____

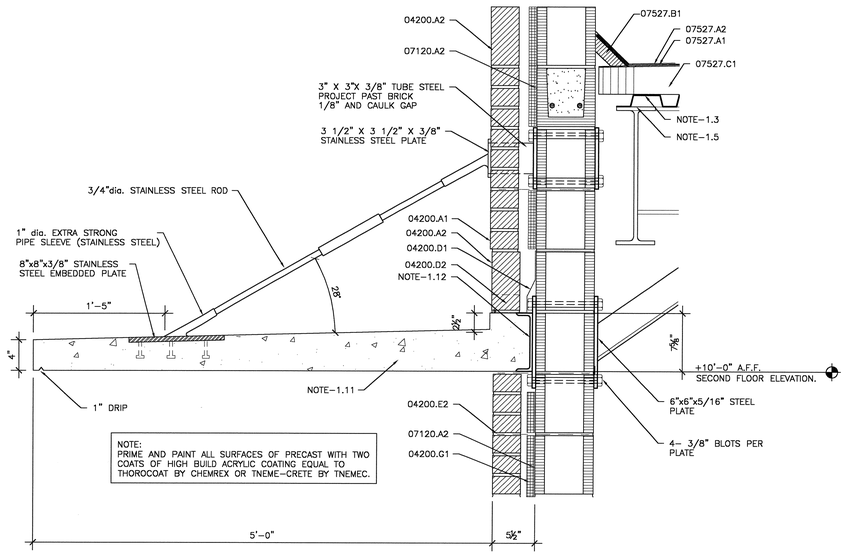

NOTE:
PRIME AND PAINT ALL SURFACES OF PRECAST WITH TWO COATS OF HIGH BUILD ACRYLIC COATING EQUAL TO THOROCOAT BY CHEMREX OR TNEME-CRETE BY TNEMEC.

3 DETAIL AT CANOPY PANEL
SCALE: 1 1/2" = 1'-0"

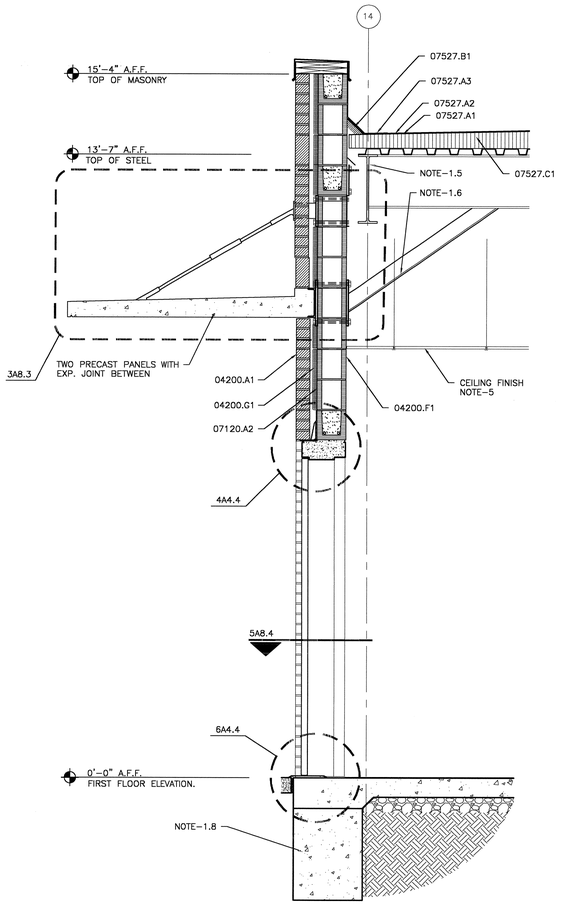

1 WALL SECTION AT PARAPET WALL
SCALE: 3/4" = 1'-0"

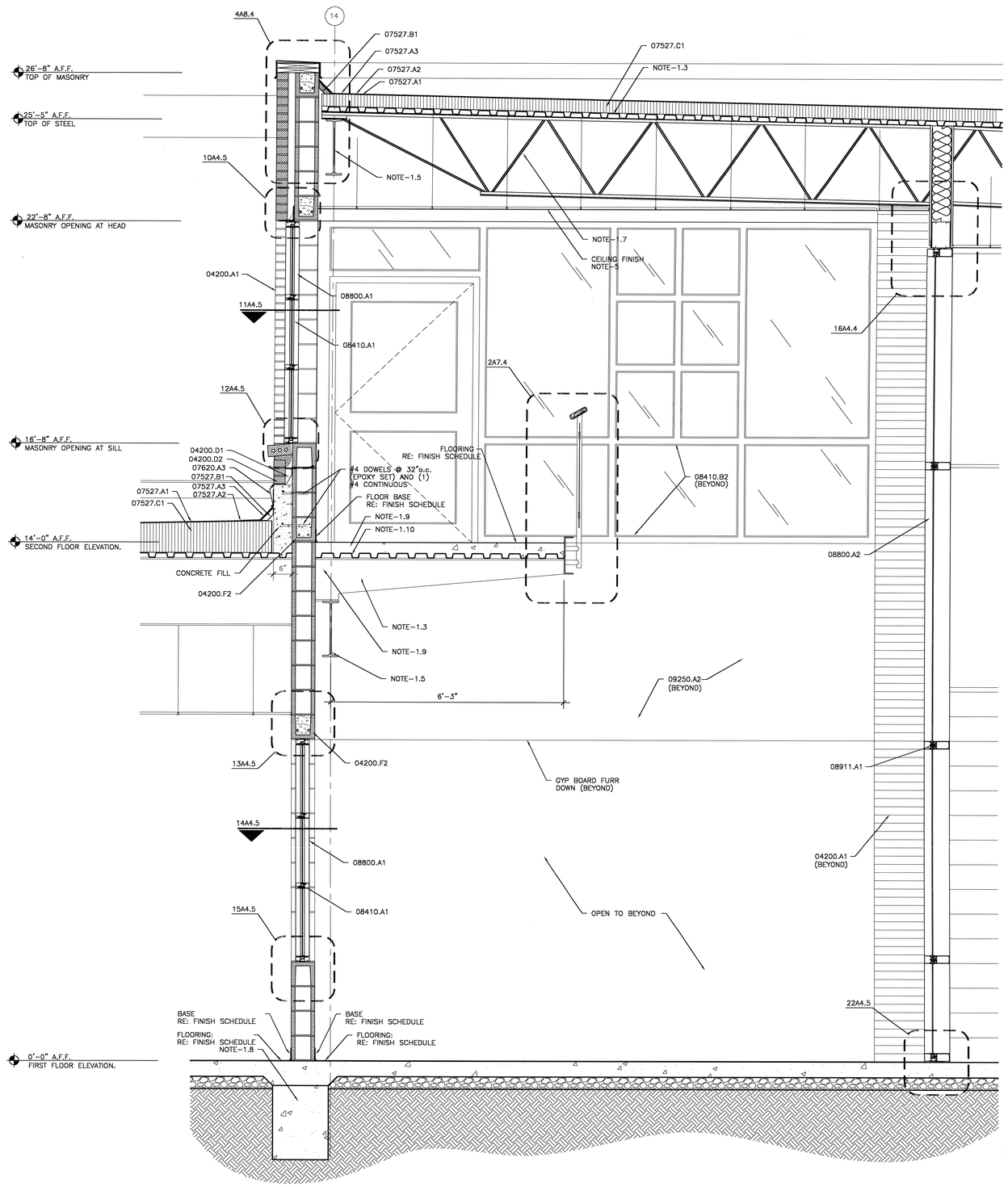

2 WALL SECTION AT CORRIDOR 010
SCALE: 3/4" = 1'-0"

MATERIAL KEYNOTES

04200.A1	4" VENEER FACE BRICK RE: ELEVATIONS AND DETAILS FOR LOCATIONS OF ACCENT COLORS OF BRICK
04200.A2	SOLDIER COURSE
04200.D1	COPPER FABRIC THRU-WALL FLASHING
04200.D2	WEEP HOLES @ 24" O.C. – OPEN HEAD JOINT TYP.
04200.E2	TWO PIECE LADDER TYPE HORIZONTAL REINFORCING WITH ADJUSTABLE EYE AND WIRE TIE
04200.F1	8 X 8 X 16 CONCRETE MASONRY UNITS
04200.F2	CONCRETE MASONRY U-BLOCK CONCRETE FILLED WITH 2- #5 REBAR CONT.
04200.G1	CAVITY WALL INSULATION
07120.A2	FLUID APPLIED WATERPROOFING OVER CMU
07527.A1	SBS-MODIFIED BITUMEN ROOFING BASE LAYER
07527.A2	SBS-MODIFIED BITUMEN CAPSHEET
07527.A3	SBS-MODIFIED BITUMEN STRIP FLASHING IN ACCORDANCE TO MANUFACTURER STANDARDS
07527.B1	CANT STRIP
07527.C1	NSULATION BOARD – MULTI-LAYERED
07620.A3	MASONRY REGLET/ RECEIVER FLASHING AND METAL COUNTER FLASHING
08410.A1	ALUMINUM STOREFRONT FRAMING (EXTERIOR WINDOWS)
08410.B2	ALUMINUM STOREFRONT ENTRANCE DOORS & FRAME (INTERIOR)
08800.A1	1/4" TINTED AND HEAT TREATED FLOAT GLASS
08800.A2	1/4" TEMPERED GLASS – INTERIOR GLAZING
08911.A1	ALUMINUM CURTAIN WALLS
09250.A2	5/8" IMPACT RESISTANT GYPSUM BOARD
NOTE-1.10	STEEL DECKING RE: STRUCTURAL
NOTE-1.11	PRE-CAST CONCRETE CANOPY RE: STRUCTURE
NOTE-1.12	STEEL CHANNEL RE: STRUCTURAL
NOTE-1.3	METAL ROOF DECK RE: STRUCTURAL
NOTE-1.5	STEEL BEAM RE: STRUCTURAL
NOTE-1.6	STEEL ANGLE RE: STRUCTURAL
NOTE-1.7	STEEL JOIST RE: STRUCTURAL
NOTE-1.8	FOUNDATION RE: STRUCTURAL
NOTE-1.9	CONCRETE SLAB RE: STRUCTURAL
NOTE-5	RE: REFLECTED CEILING PLAN – A11 SERIES

KEY PLAN

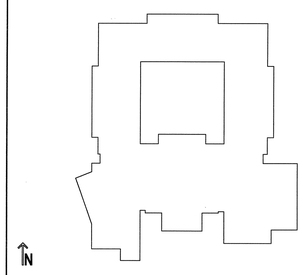

USE OF ARCHITECT'S DRAWINGS, SPECIFICATIONS AND OTHER DOCUMENTS

THE DRAWINGS, SPECIFICATIONS AND OTHER DOCUMENTS PREPARED BY THE ARCHITECT FOR THIS PROJECT ARE INSTRUMENTS OF THE ARCHITECT'S SERVICE FOR USE SOLELY WITH RESPECT TO THIS PROJECT AND, UNLESS OTHERWISE PROVIDED, THE ARCHITECT SHALL BE DEEMED THE AUTHOR OF THESE DOCUMENTS AND SHALL RETAIN ALL COMMON LAW, STATUTORY AND OTHER RESERVED RIGHTS, INCLUDING REPRODUCIBLE COPIES, OF THE ARCHITECT'S DRAWINGS, SPECIFICATIONS AND OTHER DOCUMENTS FOR INFORMATION AND REFERENCE IN CONNECTION WITH THE OWNER'S USE AND OCCUPANCY OF THE PROJECT. THE ARCHITECT'S DRAWINGS, SPECIFICATIONS OR OTHER DOCUMENTS SHALL NOT BE USED BY THE OWNER OR OTHERS ON OTHER PROJECTS, FOR ADDITIONS TO THIS PROJECT OR FOR COMPLETION OF THIS PROJECT BY OTHERS, UNLESS THE ARCHITECT IS ADJUDGED TO BE IN DEFAULT UNDER THIS AGREEMENT, EXCEPT BY AGREEMENT IN WRITING AND WITH APPROPRIATE COMPENSATION TO THE ARCHITECT.

NO.	DATE	REVISION/SUBMISSION
1	11/12/04	FIRE MARSHAL AND C.P. REVISIONS

McKINLEY MIDDLE MAGNET SCHOOL

1550 EDDIE ROBINSON SR. DRIVE
BATON ROUGE, LOUISIANA 70802

Robert M. Coleman & Partners Architects A.I.A.
3377 North Boulevard
Baton Rouge, Louisiana 70806
U.S.A.
tel 225.387.4414
fax 225.387.4693

WALL SECTIONS

PROJECT NO.	03048
DRAWN BY	CS, BH, JM
CHECKED BY	JS
DATE	October 15, 2004
SHEET NO..	A8.3
	OF

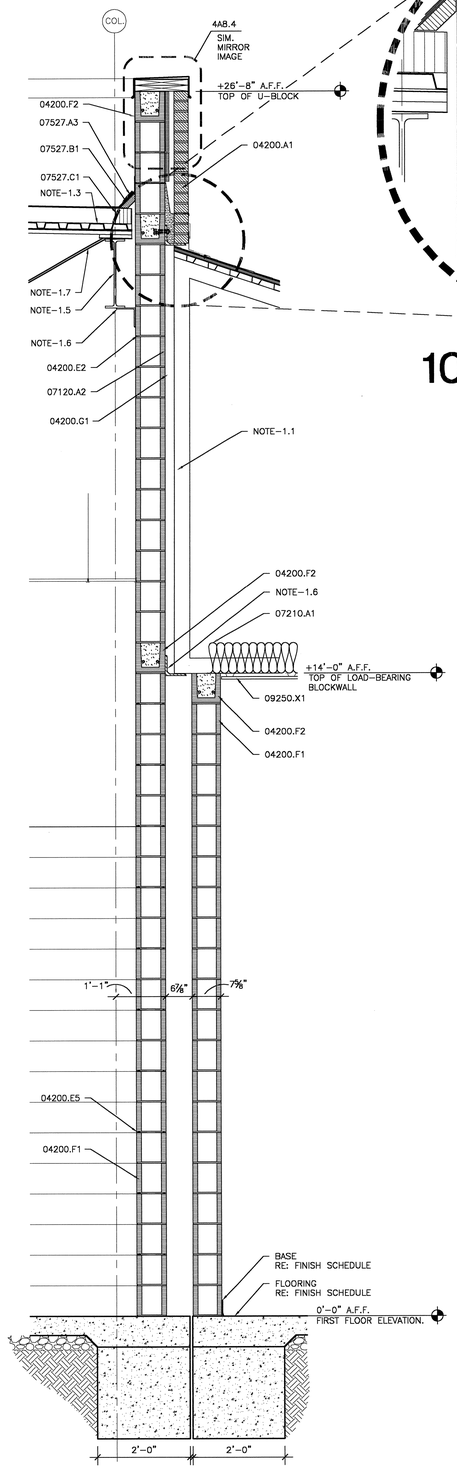

1 WALL SECTION
SCALE: 3/4" = 1'-0"

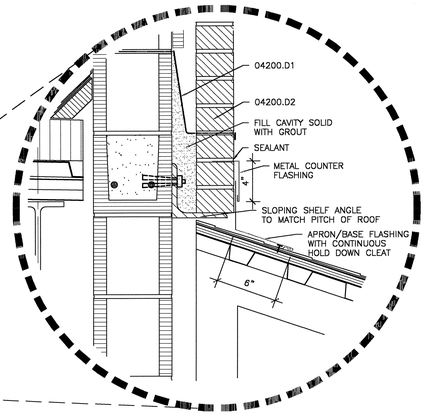

10 DETAIL
SCALE: 2" = 1'-0"

NOTE: SLOPING AND HORIZONTAL METAL SHELF ANGLES TO BE ANCHORED TO BLOCK WALL WITH 1/2" DIAMETER EXPANSION ANCHORS @ 48" O.C. HORIZONTAL (ANCHOR INTO FILLED CMU).

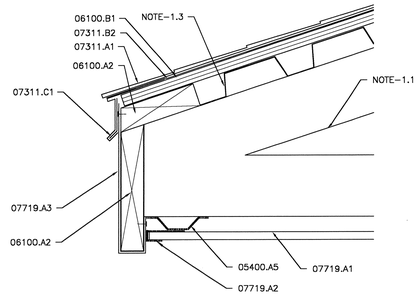

3 FASCIA DETAIL
SCALE: 3" = 1'-0"

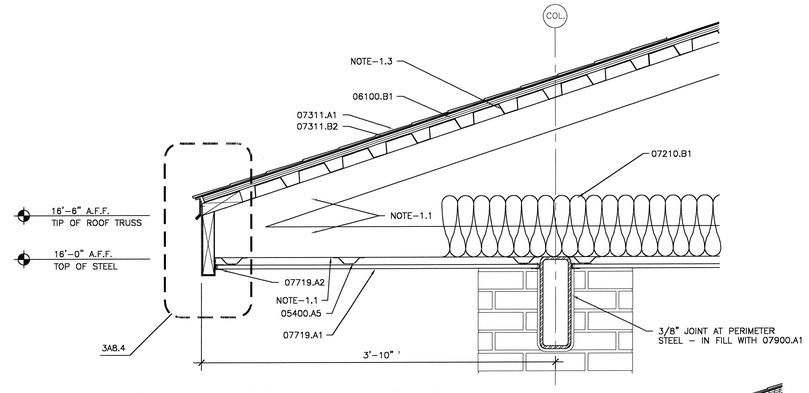

6 EAVE DETAIL - GYMNASIUM
SCALE: 1 1/2" = 1'-0"

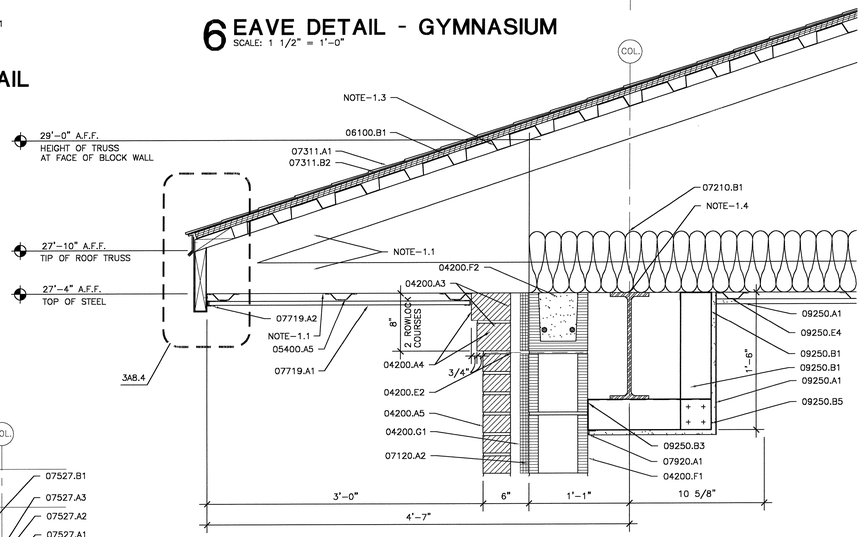

7 EAVE DETAIL
SCALE: 1 1/2" = 1'-0"

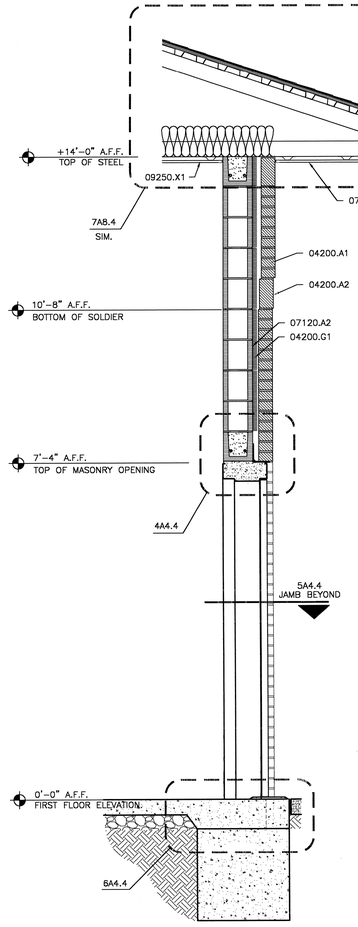

2 WALL SECTION AT MECHANICAL ROOM AND SCENE SHOP
SCALE: 3/4" = 1'-0"

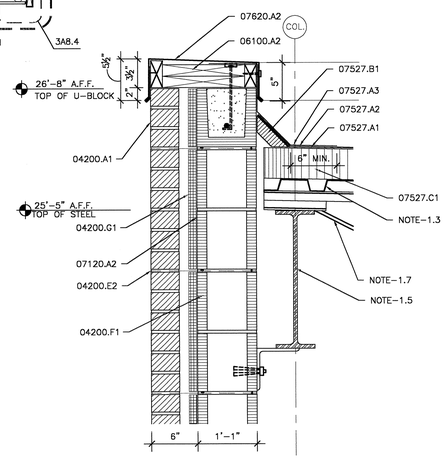

4 PARAPET DETAIL
SCALE: 1 1/2" = 1'-0"

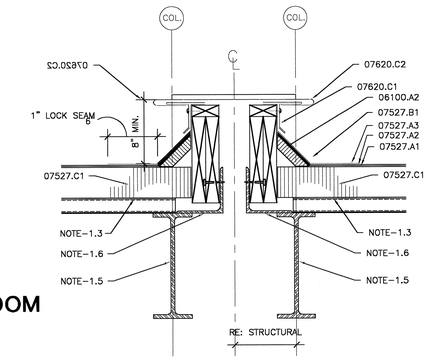

5 EXPANSION JOINT COVER DETAIL
SCALE: 1 1/2" = 1'-0"

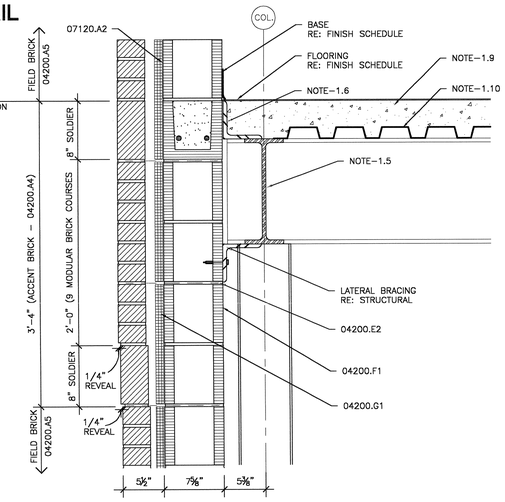

8 REVEAL DETAIL
SCALE: 1 1/2" = 1'-0"

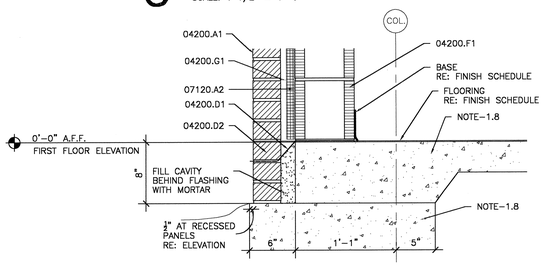

9 FOUNDATION DETAIL
SCALE: 1 1/2" = 1'-0"

MATERIAL KEYNOTES

04200.A1	4" VENEER FACE BRICK RE: ELEVATIONS AND DETAILS FOR LOCATIONS OF ACCENT COLORS OF BRICK
04200.A2	SOLDIER COURSE
04200.A3	ROWLOCK COURSE
04200.A4	4" FACE BRICK – ACCENT COLOR
04200.A5	4" FACE BRICK – FIELD COLOR
04200.D1	COPPER FABRIC THRU-WALL FLASHING
04200.D2	WEEP HOLES @ 24" O.C. – OPEN HEAD JOINT TYP.
04200.E2	TWO PIECE LADDER TYPE HORIZONTAL REINFORCING WITH ADJUSTABLE EYE AND WIRE TIE
04200.E5	LADDER TYPE HORIZONTAL REINFORCING @ 16" o.c. VERTICAL TYPICAL
04200.F1	8 X 8 X 16 CONCRETE MASONRY UNITS
04200.F2	CONCRETE MASONRY U-BLOCK CONCRETE FILLED WITH 2- #5 REBAR CONT.
04200.G1	CAVITY WALL INSULATION
05400.A5	7/8" – 20 GA. FURRING CHANNEL
06100.A2	PRESSURE TREATED 2X WOOD BLOCKING
06100.B1	3/4" PLYWOOD SHEATHING
07120.A2	FLUID APPLIED WATERPROOFING OVER CMU
07210.A1	8" BATT. INSULATION
07210.B1	LOOSE FILL INSULATION R-30 MINIMUM
07311.A1	ASPHALT SHINGLES
07311.B2	2 LAYERS OF #15 ASPHALT SATURATED FELT
07311.C1	PREFINISHED METAL DRIP
07527.A1	SBS-MODIFIED BITUMEN ROOFING BASE LAYER
07527.A2	SBS-MODIFIED BITUMEN CAPSHEET
07527.A3	SBS-MODIFIED BITUMEN STRIP FLASHING IN ACCORDANCE TO MANUFACTURER STANDARDS
07527.B1	CANT STRIP
07527.C1	NSULATION BOARD – MULTI-LAYERED
07620.A2	PREFINISHED METAL COPING WITH CONTINUOUS HOLD DOWN CLEAT
07620.C1	CONTINUOUS METAL FLANGE SECURED WITH SCREWS, WITH WASHERS AT 18" O.C.
07620.C2	METAL EXPANSION CAP – 12'-0" LONG MAX. – JOIN ENDS WITH STANDING SEAMS
07719.A1	PREFINISHED METAL SOFFIT PANEL
07719.A2	PREFINISH "J" CLOSURE TO MATCH PANEL
07719.A3	PREFINISHED METAL FASCIA MATCH FINISH OF SOFFIT PANEL
09250.A1	5/8" GYPSUM BOARD
09250.B1	3-5/8" METAL STUDS
09250.B3	METAL STUD TRACK
09250.B5	2-1/2" x 2-1/2" COLD ROLLED ANGLE (20 GA.)
09250.E4	7/8" METAL FURRING CHANNEL @ 16" O.C.
09250.X1	INSTALL 7/8" HAT CHANNELS @ 16 O.C. ON UNDERSIDE OF ALL PRE-ENGINEERED TRUSSES. INSTALL 5/8" GYPSUM BOARD ACROSS ENTIRE UNDERSIDE OF TRUSSES. TAPE AND FLOAT BEFORE ERECTING PARTITIONS TO UNDERSIDE OF GYPSUM BOARD.
NOTE-1.1	PRE-ENGINEERED ROOF TRUSS RE: STRUCTURAL
NOTE-1.10	STEEL DECKING RE: STRUCTURAL
NOTE-1.3	METAL ROOF DECK RE: STRUCTURAL
NOTE-1.4	STEEL COLUMN RE: STRUCTURAL
NOTE-1.5	STEEL BEAM RE: STRUCTURAL
NOTE-1.6	STEEL ANGLE RE: STRUCTURAL
NOTE-1.7	STEEL JOIST RE: STRUCTURAL
NOTE-1.8	FOUNDATION RE: STRUCTURAL
NOTE-1.9	CONCRETE SLAB RE: STRUCTURAL

USE OF ARCHITECT'S DRAWINGS, SPECIFICATIONS AND OTHER DOCUMENTS

THE DRAWINGS, SPECIFICATIONS AND OTHER DOCUMENTS PREPARED BY THE ARCHITECT FOR THIS PROJECT ARE INSTRUMENTS OF THE ARCHITECT'S SERVICE FOR USE SOLELY WITH RESPECT TO THIS PROJECT AND, UNLESS OTHERWISE PROVIDED, THE ARCHITECT SHALL BE DEEMED THE AUTHOR OF THESE DOCUMENTS AND SHALL RETAIN ALL COMMON LAW, STATUTORY AND OTHER RESERVED RIGHTS, INCLUDING REPRODUCIBLE COPIES, OF THE ARCHITECT'S DRAWINGS, SPECIFICATIONS AND OTHER DOCUMENTS FOR INFORMATION AND REFERENCE IN CONNECTION WITH THE OWNER'S USE AND OCCUPANCY OF THE PROJECT. THE ARCHITECT'S DRAWINGS, SPECIFICATIONS OR OTHER DOCUMENTS SHALL NOT BE USED BY THE OWNER OR OTHERS ON OTHER PROJECTS, FOR ADDITIONS TO THIS PROJECT OR FOR COMPLETION OF THIS PROJECT BY OTHERS, UNLESS THE ARCHITECT IS ADJUDGED TO BE IN DEFAULT UNDER THIS AGREEMENT, EXCEPT BY AGREEMENT IN WRITING AND WITH APPROPRIATE COMPENSATION TO THE ARCHITECT.

NO.	DATE	REVISION/SUBMISSION
1	11/12/04	FIRE MARSHAL AND C.P. REVISIONS

McKINLEY MIDDLE MAGNET SCHOOL

1550 EDDIE ROBINSON SR. DRIVE
BATON ROUGE, LOUISIANA 70802

Robert M. Coleman & Partners Architects A.I.A.
3377 North Boulevard
Baton Rouge, Louisiana 70806
U.S.A.
tel 225.387.4414
fax 225.387.4693

WALL SECTIONS/DETAILS

PROJECT NO. 03048	SHEET NO.. A8.4
DRAWN BY CS, BH, JM	
CHECKED BY JS	
DATE October 15, 2004	_____ OF _____

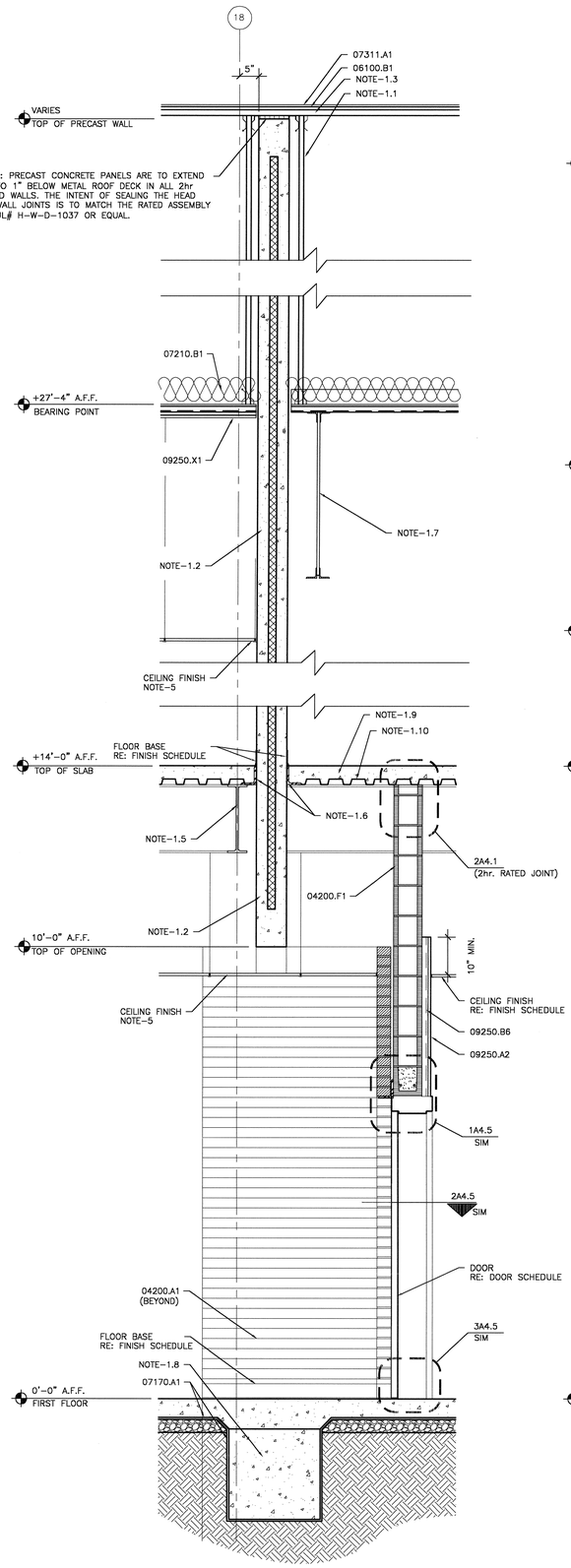

1 WALL SECTION AT AUDITORIUM

SCALE: 3/4" = 1'-0"

NOTE: PROVIDE A SUBSTRATE SUITABLE TO RECEIVE BENTONITE WATERPROOFING ACCORDING TO MANUFACTURERS RECOMMENDATIONS. (TYPICAL)

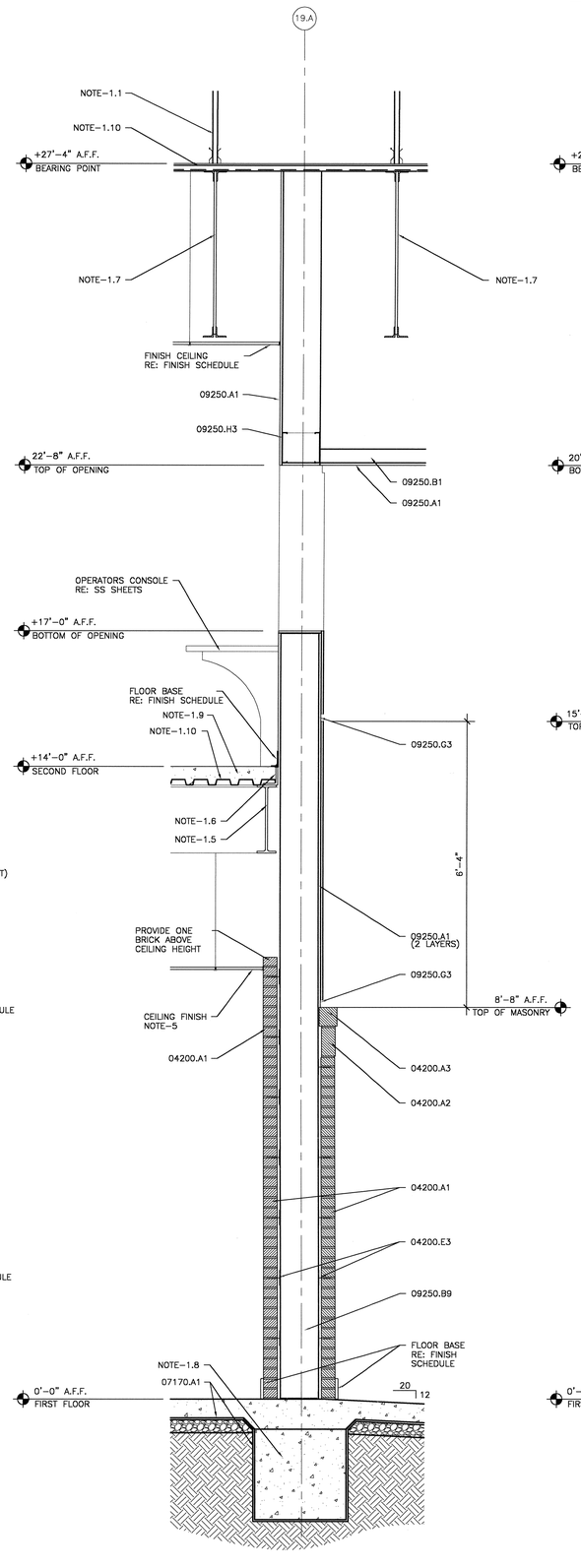

2 WALL SECTION AT AUDITORIUM

SCALE: 3/4" = 1'-0"

NOTE: ALL SHEET ROCK BELOW 8'-0" A.F.F. SHALL BE HIGH ABUSE IMPACT RESISTANT GYPSUM BOARD. (TYPICAL)

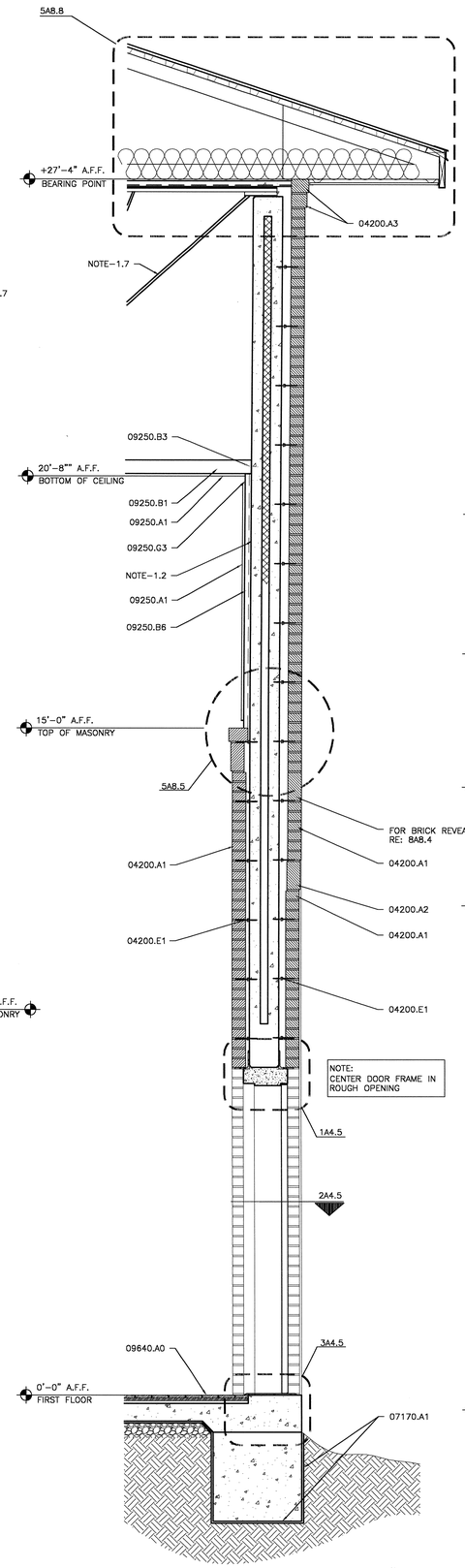

3 WALL SECTION AT AUDITORIUM

SCALE: 3/4" = 1'-0"

NOTE: IN THE STAGE AREA THE INTERIOR BRICK AND GYPSUM BOARD AND METAL STUDS ARE NOT USED.

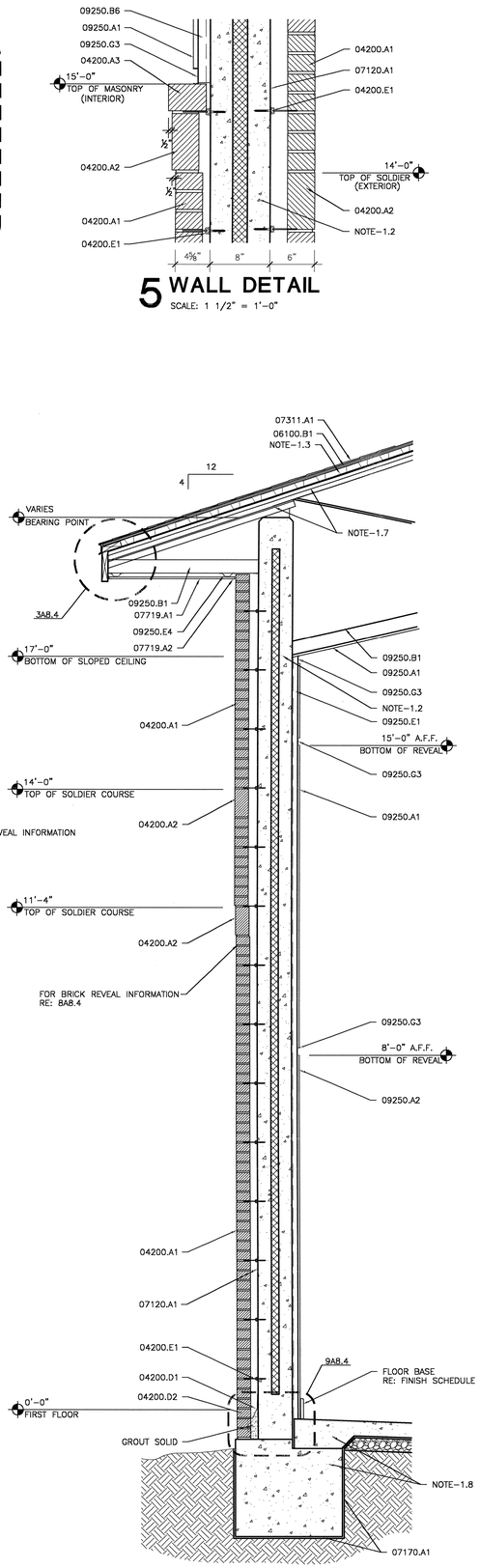

4 WALL SECTION AT AUDITORIUM

SCALE: 3/4" = 1'-0"

MATERIAL KEYNOTES

04200.A1	4" VENEER FACE BRICK RE: ELEVATIONS AND DETAILS FOR LOCATIONS OF ACCENT COLORS OF BRICK
04200.A2	SOLDIER COURSE
04200.A3	ROWLOCK COURSE
04200.D1	COPPER FABRIC THRU-WALL FLASHING
04200.D2	WEEP HOLES @ 24" O.C. – OPEN HEAD JOINT TYP.
04200.E1	ADJUSTABLE MASONRY VENEER WALL TIES (FOR PRECAST) @ 16" O.C. VERT. MAX 24" O.C. HORIZ. MAX. HECKMANN "POST-I-TIE" TAPON SCREW AND POST-I-TIE TRIANGLE WIRE TIE OR APPROVED EQUAL
04200.E3	ADJUSTABLE MASONRY VENEER WALL TIES @ 16" O.C. VERT. MAX. 24" O.C. HORIZ. MAX
04200.F1	8 X 8 X 16 CONCRETE MASONRY UNITS
06100.B1	3/4" PLYWOOD SHEATHING
07120.A1	FLUID APPLIED WATERPROOFING OEVER PRECAST PANEL. SEAL ALL PANEL JOINTS WITH BACKER ROD AND SEALANT
07170.A1	BENTONITE WATERPROOFING
07210.B1	LOOSE FILL INSULATION R-30 MINIMUM
07311.A1	ASPHALT SHINGLES
07719.A1	PREFINISHED METAL SOFFIT PANEL
07719.A2	PREFINISH "J" CLOSURE TO MATCH PANEL
09250.A1	5/8" GYPSUM BOARD
09250.A2	5/8" IMPACT RESISTANT GYPSUM BOARD
09250.B1	3-5/8" METAL STUDS
09250.B3	METAL STUD TRACK
09250.B6	1-5/8" METAL STUDS @ 16" O.C.
09250.B9	10" METAL STUDS @ 16"o.c.
09250.E1	1-1/2" METAL FURRING CHANNEL @ 16" O.C.
09250.E4	7/8" METAL FURRING CHANNEL @ 16" O.C.
09250.G3	EXTRUDED ALUMINUM DRYWALL REVEAL 2" – TYPE F" REVEAL
09250.H3	NESTED DBL 8" METAL STUD BOX BEAM
09250.X1	INSTALL 7/8" HAT CHANNELS @ 16 O.C. ON UNDERSIDE OF ALL PRE-ENGINEERED TRUSSES. INSTALL 5/8" GYPSUM BOARD ACROSS ENTIRE UNDERSIDE OF TRUSSES. TAPE AND FLOAT BEFORE ERECTING PARTITIONS TO UNDERSIDE OF GYPSUM BOARD.
09640.A0	WOOD FLOORING – STAGE
NOTE-1.1	PRE-ENGINEERED ROOF TRUSS RE: STRUCTURAL
NOTE-1.10	STEEL DECKING RE: STRUCTURAL
NOTE-1.2	PRECAST CONCRETE PANEL RE: STRUCTURAL
NOTE-1.3	METAL ROOF DECK RE: STRUCTURAL
NOTE-1.5	STEEL BEAM RE: STRUCTURAL
NOTE-1.6	STEEL ANGLE RE: STRUCTURAL
NOTE-1.7	STEEL JOIST RE: STRUCTURAL
NOTE-1.8	FOUNDATION RE: STRUCTURAL
NOTE-1.9	CONCRETE SLAB RE: STRUCTURAL
NOTE-5	RE: REFLECTED CEILING PLAN – A11 SERIES

KEY PLAN

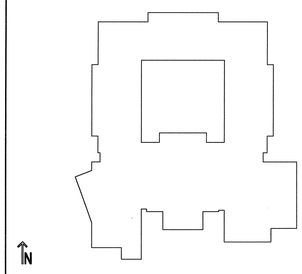

USE OF ARCHITECT'S DRAWINGS, SPECIFICATIONS AND OTHER DOCUMENTS

THE DRAWINGS, SPECIFICATIONS AND OTHER DOCUMENTS PREPARED BY THE ARCHITECT FOR THIS PROJECT ARE INSTRUMENTS OF THE ARCHITECT'S SERVICE FOR USE SOLELY WITH RESPECT TO THIS PROJECT AND, UNLESS OTHERWISE PROVIDED, THE ARCHITECT SHALL BE DEEMED THE AUTHOR OF THESE DOCUMENTS AND SHALL RETAIN ALL COMMON LAW, STATUTORY AND OTHER RESERVED RIGHTS, INCLUDING REPRODUCIBLE COPIES, OF THE ARCHITECT'S DRAWINGS, SPECIFICATIONS AND OTHER DOCUMENTS FOR INFORMATION AND REFERENCE IN CONNECTION WITH THE OWNER'S USE AND OCCUPANCY OF THE PROJECT. THE ARCHITECT'S DRAWINGS, SPECIFICATIONS OR OTHER DOCUMENTS SHALL NOT BE USED BY THE OWNER OR OTHERS ON OTHER PROJECTS, FOR ADDITIONS TO THIS PROJECT OR FOR COMPLETION OF THIS PROJECT BY OTHERS, UNLESS THE ARCHITECT IS ADJUDGED TO BE IN DEFAULT UNDER THIS AGREEMENT, EXCEPT BY AGREEMENT IN WRITING AND WITH APPROPRIATE COMPENSATION TO THE ARCHITECT.

NO.	DATE	REVISION/SUBMISSION
1	11/12/04	FIRE MARSHAL AND C.P. REVISIONS

McKINLEY MIDDLE MAGNET SCHOOL

1550 EDDIE ROBINSON SR. DRIVE
BATON ROUGE, LOUISIANA 70802

Robert M. Coleman & Partners Architects A.I.A.
3377 North Boulevard
Baton Rouge, Louisiana 70806
U.S.A.
tel 225.387.4414
fax 225.387.4693

WALL SECTIONS

PROJECT NO. 03048	SHEET NO.. A8.5
DRAWN BY CS, JM	
CHECKED BY JS	
DATE October 15, 2004	OF

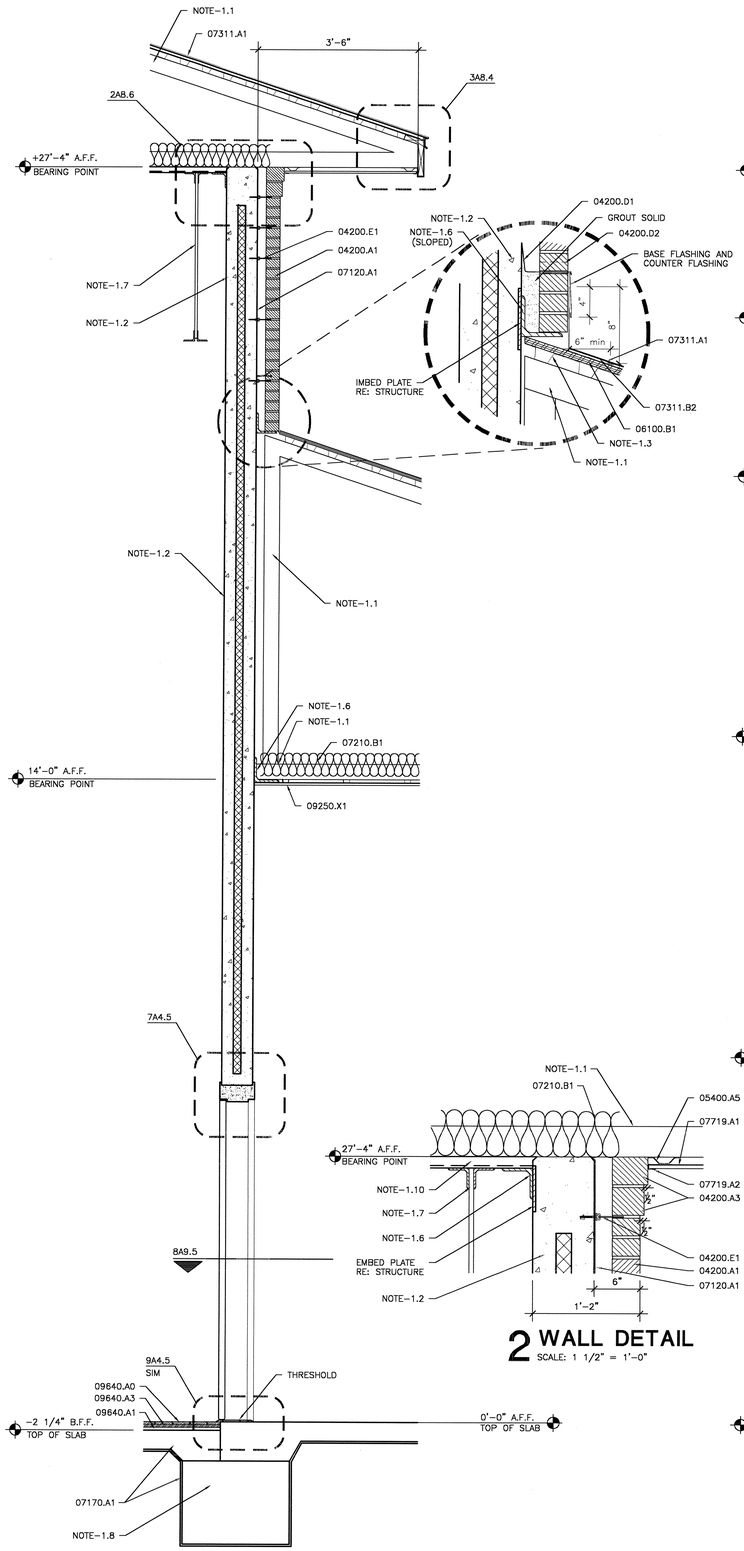

1 WALL SECTION AT AUDITORIUM

SCALE: 3/4" = 1'-0"

NOTE: ALL SHEET ROCK BELOW 8'-0" A.F.F. SHALL BE HIGH ABUSE IMPACT RESISTANT GYPSUM BOARD. (TYPICAL)

2 WALL DETAIL

SCALE: 1 1/2" = 1'-0"

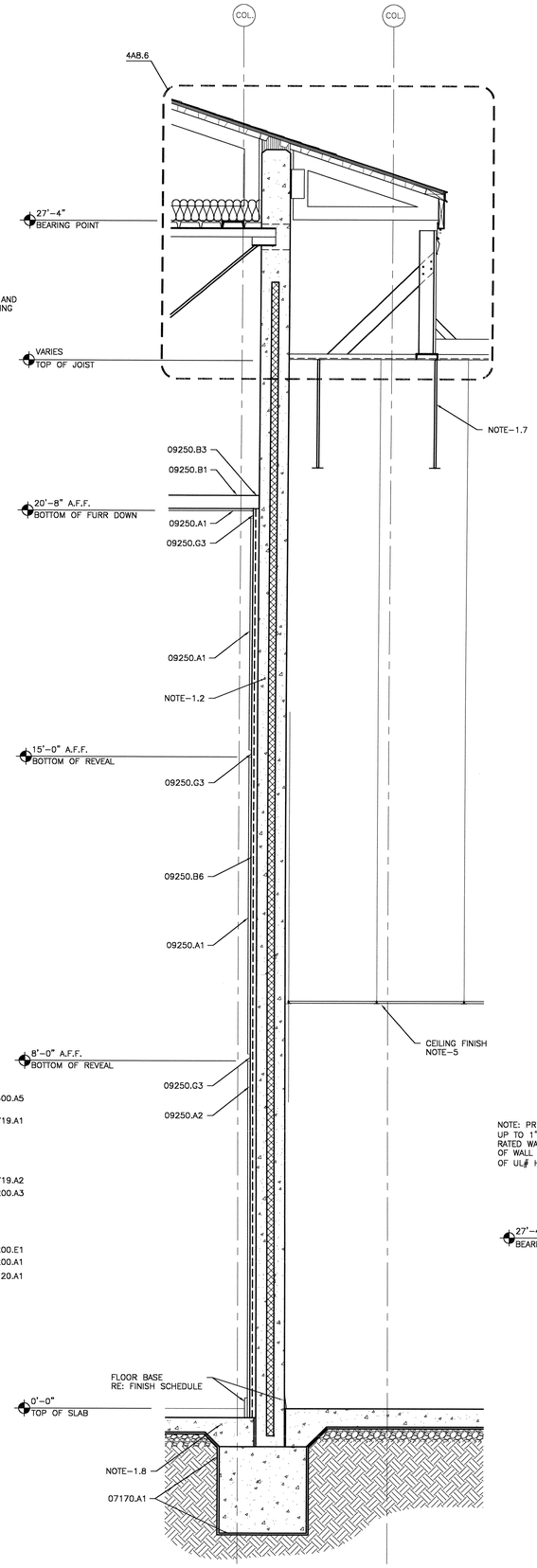

3 WALL SECTION AT AUDITORIUM

SCALE: 3/4" = 1'-0"

NOTE: PROVIDE A SUBSTRATE SUITABLE TO RECEIVE BENTONITE WATERPROOFING ACCORDING TO MANUFACTURERS RECOMMENDATIONS. (TYPICAL)

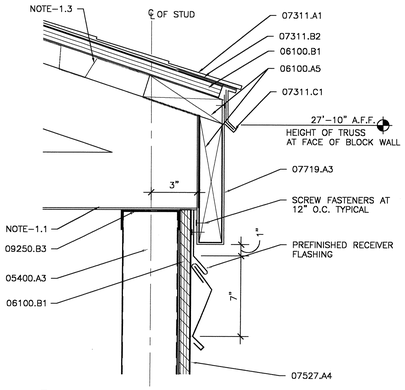

6 FASCIA DETAIL

SCALE: 3" = 1'-0"

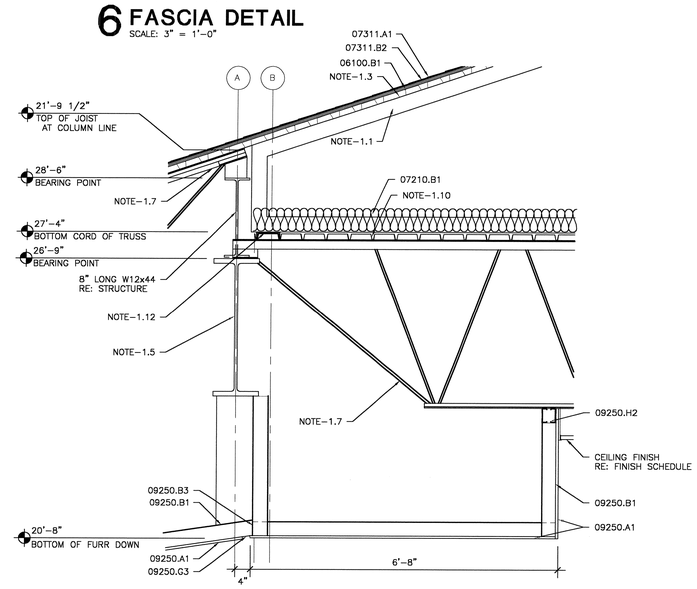

5 ROOF DETAIL

SCALE: 3/4" = 1'-0"

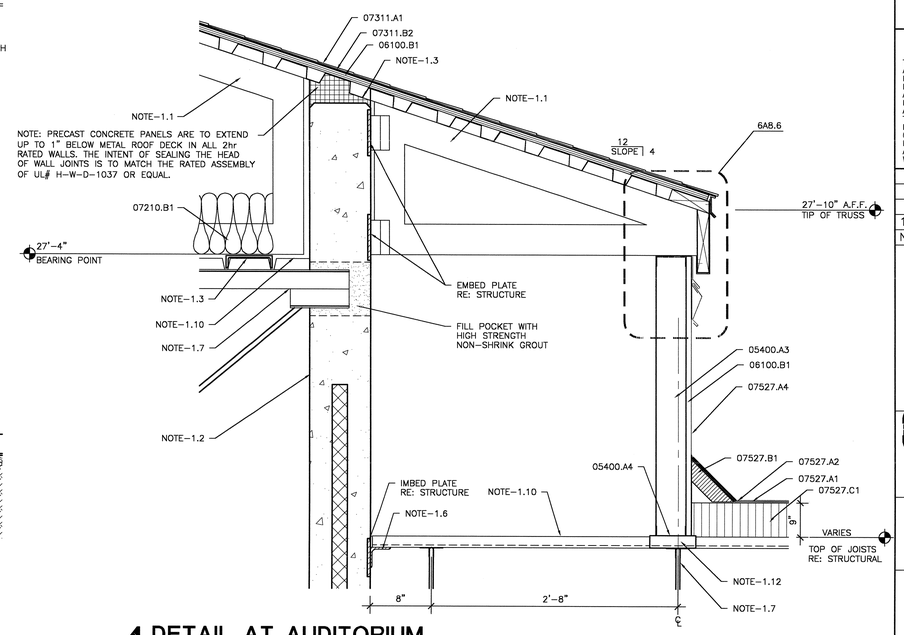

4 DETAIL AT AUDITORIUM

SCALE: 3/4" = 1'-0"

MATERIAL KEYNOTES

04200.A1	4" VENEER FACE BRICK RE: ELEVATIONS AND DETAILS FOR LOCATIONS OF ACCENT COLORS OF BRICK
04200.A3	ROWLOCK COURSE
04200.D1	COPPER FABRIC THRU-WALL FLASHING
04200.D2	WEEP HOLES @ 24" O.C. - OPEN HEAD JOINT TYP.
04200.E1	ADJUSTABLE MASONRY VENEER WALL TIES (FOR PRECAST) @ 16" O.C. VERT. MAX 24" O.C. HORIZ. MAX. HECKMANN "POST-I-TIE" TAPON SCREW AND POST-I-TIE TRIANGLE WIRE TIE OR APPROVED EQUAL
05400.A3	3-5/8" METAL STUDS
05400.A4	3-5/8" METAL STUD TRACK
05400.A5	7/8" - 20 GA. FURRING CHANNEL
06100.A5	PRESSURE TREATED WOOD BLOCKING
06100.B1	3/4" PLYWOOD SHEATHING
07120.A1	FLUID APPLIED WATERPROOFING OEVER PRECAST PANEL, SEAL ALL PANEL JOINTS WITH BACKER ROD AND SEALANT
07170.A1	BENTONITE WATERPROOFING
07210.B1	LOOSE FILL INSULATION R-30 MINIMUM
07311.A1	ASPHALT SHINGLES
07311.B2	2 LAYERS OF #15 ASPHALT SATURATED FELT
07311.C1	PREFINISHED METAL DRIP
07527.A1	SBS-MODIFIED BITUMEN ROOFING BASE LAYER
07527.A2	SBS-MODIFIED BITUMEN CAPSHEET
07527.A4	SBS- MODIFIED BITUMEN COUNTERFLASHING EXTEND UP PARAPET AND ATTACH IN ACCORDANCE TO MANUFACTURER STANDARDS
07527.B1	CANT STRIP
07527.C1	NSULATION BOARD - MULTI-LAYERED
07719.A1	PREFINISHED METAL SOFFIT PANEL
07719.A2	PREFINISH "J" CLOSURE TO MATCH PANEL
07719.A3	PREFINISHED METAL FASCIA MATCH FINISH OF SOFFIT PANEL
09250.A1	5/8" GYPSUM BOARD
09250.A2	5/8" IMPACT RESISTANT GYPSUM BOARD
09250.B1	3-5/8" METAL STUDS
09250.B3	METAL STUD TRACK
09250.B6	1-5/8" METAL STUDS @ 16" O.C.
09250.G3	EXTRUDED ALUMINUM DRYWALL REVEAL 2" - TYPE F" REVEAL
09250.H2	NESTED DBL 3-5/8" METAL STUD BOX BEAM
09250.X1	INSTALL 7/8" HAT CHANNELS @ 16 O.C. ON UNDERSIDE OF ALL PRE-ENGINEERED TRUSSES. INSTALL 5/8" GYPSUM BOARD ACROSS ENTIRE UNDERSIDE OF TRUSSES. TAPE AND FLOAT BEFORE ERECTING PARTITIONS TO UNDERSIDE OF GYPSUM BOARD.
09640.A0	WOOD FLOORING - STAGE
09640.A1	1X TREATED SLEEPERS
09640.A3	PLYWOOD
NOTE-1.1	PRE-ENGINEERED ROOF TRUSS RE: STRUCTURAL
NOTE-1.10	STEEL DECKING RE: STRUCTURAL
NOTE-1.12	STEEL CHANNEL RE: STRUCTURAL
NOTE-1.2	PRECAST CONCRETE PANEL RE: STRUCTURAL
NOTE-1.3	METAL ROOF DECK RE: STRUCTURAL
NOTE-1.5	STEEL BEAM RE: STRUCTURAL
NOTE-1.6	STEEL ANGLE RE: STRUCTURAL
NOTE-1.7	STEEL JOIST RE: STRUCTURAL
NOTE-1.8	FOUNDATION RE: STRUCTURAL
NOTE-5	RE: REFLECTED CEILING PLAN - A11 SERIES

KEY PLAN

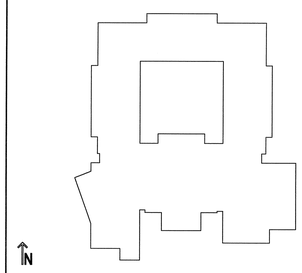

USE OF ARCHITECT'S DRAWINGS, SPECIFICATIONS AND OTHER DOCUMENTS

THE DRAWINGS, SPECIFICATIONS AND OTHER DOCUMENTS PREPARED BY THE ARCHITECT FOR THIS PROJECT ARE INSTRUMENTS OF THE ARCHITECT'S SERVICE FOR USE SOLELY WITH RESPECT TO THIS PROJECT AND, UNLESS OTHERWISE PROVIDED, THE ARCHITECT SHALL BE DEEMED THE AUTHOR OF THESE DOCUMENTS AND SHALL RETAIN ALL COMMON LAW, STATUTORY AND OTHER RESERVED RIGHTS, INCLUDING REPRODUCIBLE COPIES, OF THE ARCHITECT'S DRAWINGS, SPECIFICATIONS AND OTHER DOCUMENTS FOR INFORMATION AND REFERENCE IN CONNECTION WITH THE OWNER'S USE AND OCCUPANCY OF THE PROJECT. THE ARCHITECT'S DRAWINGS, SPECIFICATIONS OR OTHER DOCUMENTS SHALL NOT BE USED BY THE OWNER OR OTHERS ON OTHER PROJECTS, FOR ADDITIONS TO THIS PROJECT OR FOR COMPLETION OF THIS PROJECT BY OTHERS, UNLESS THE ARCHITECT IS ADJUDGED TO BE IN DEFAULT UNDER THIS AGREEMENT, EXCEPT BY AGREEMENT IN WRITING AND WITH APPROPRIATE COMPENSATION TO THE ARCHITECT.

NO.	DATE	REVISION/SUBMISSION
1	11/12/04	FIRE MARSHAL AND C.P. REVISIONS

McKINLEY MIDDLE MAGNET SCHOOL

1550 EDDIE ROBINSON SR. DRIVE
BATON ROUGE, LOUISIANA 70802

Robert M. Coleman Architects & Partners A.I.A.
3377 North Boulevard
Baton Rouge, Louisiana
70808
U.S.A.
tel 225.387.4414
fax 225.387.4693

WALL SECTIONS/DETAILS

PROJECT NO. 03048	SHEET NO.. A8.6
DRAWN BY CS, BH	
CHECKED BY JS	
DATE October 15, 2004	OF

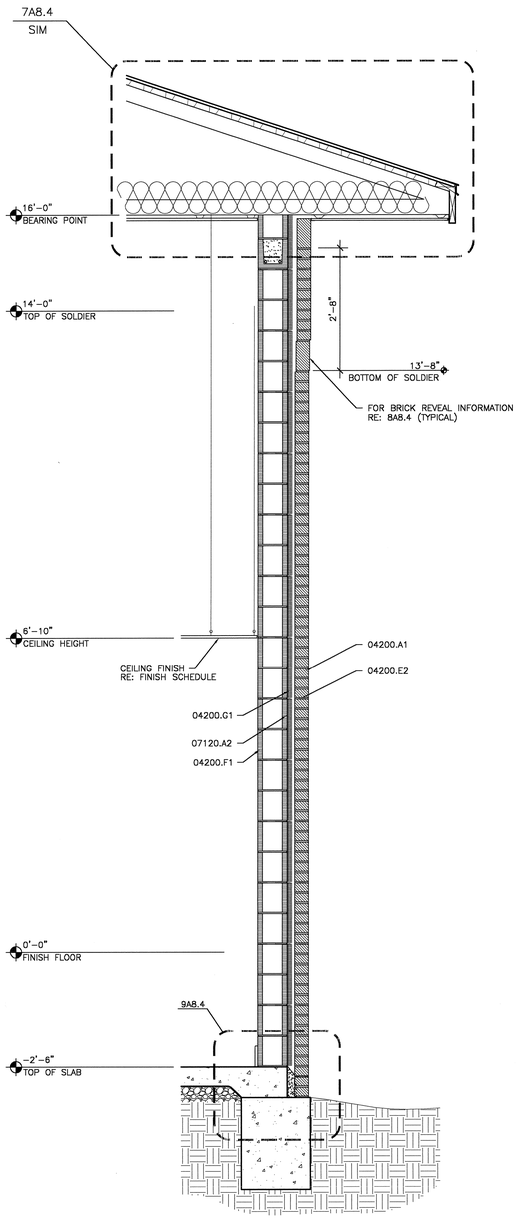

1 WALL SECTION
SCALE: 3/4" = 1'-0"

NOTE: IN LOAD BEARING CMU WALLS, REFER TO STRUCTURE FOR LOCATION OF REBAR AND CONCRETE FIELD CELLS.

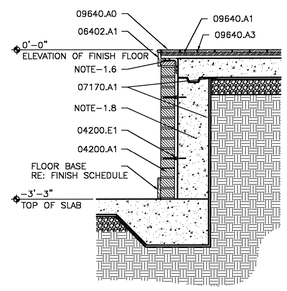

3 STAGE DETAIL
SCALE: 3/4" = 1'-0"

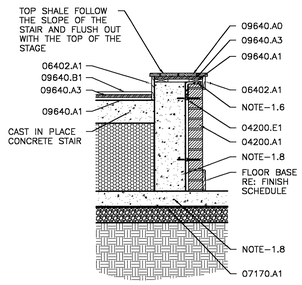

5 STAIR DETAIL
SCALE: 3/4" = 1'-0"

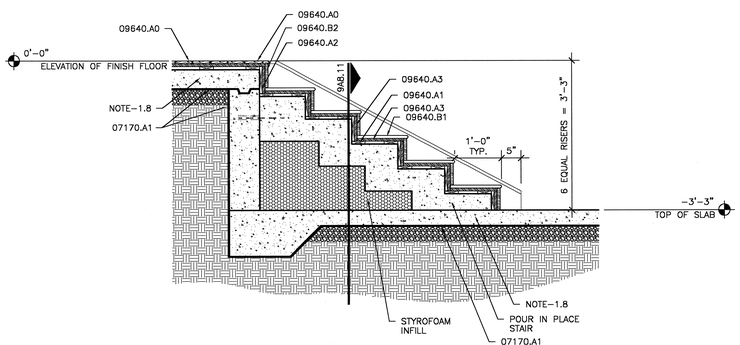

4 STAIR DETAIL
SCALE: 3/4" = 1'-0"

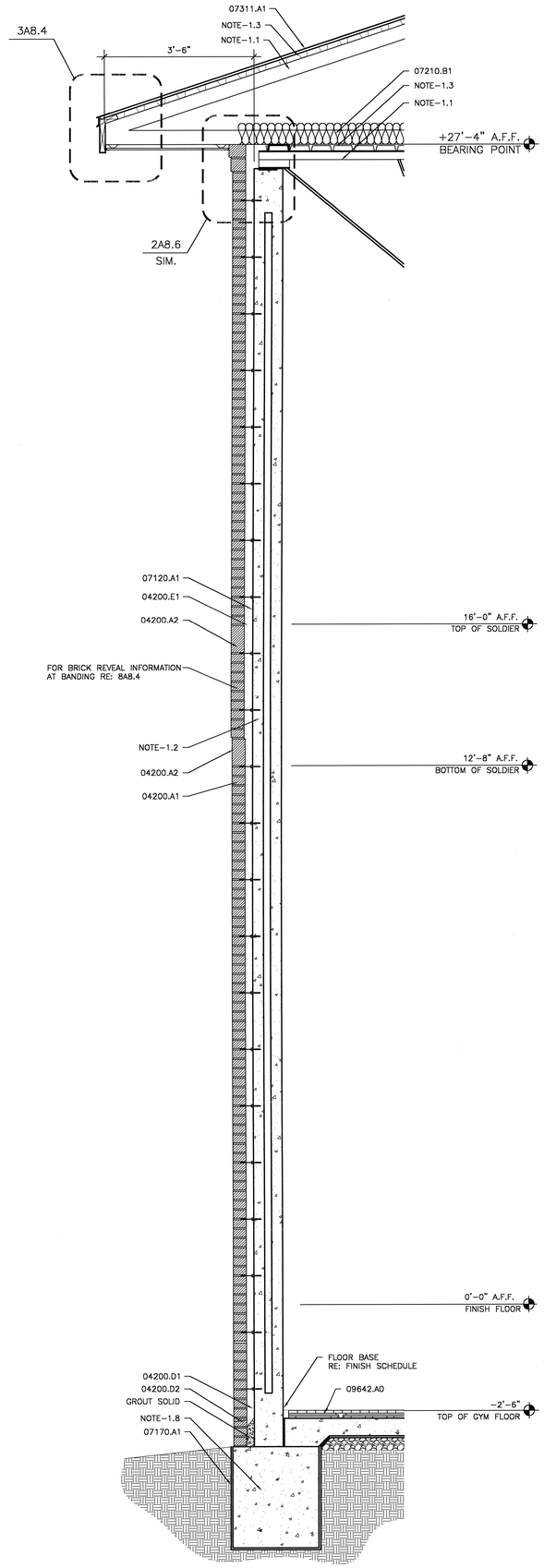

2 WALL SECTION
SCALE: 3/4" = 1'-0"

NOTE: PROVIDE A SUBSTRATE SUITABLE TO RECEIVE BENTONITE WATERPROOFING ACCORDING TO MANUFACTURERS RECOMMENDATIONS. (TYPICAL)

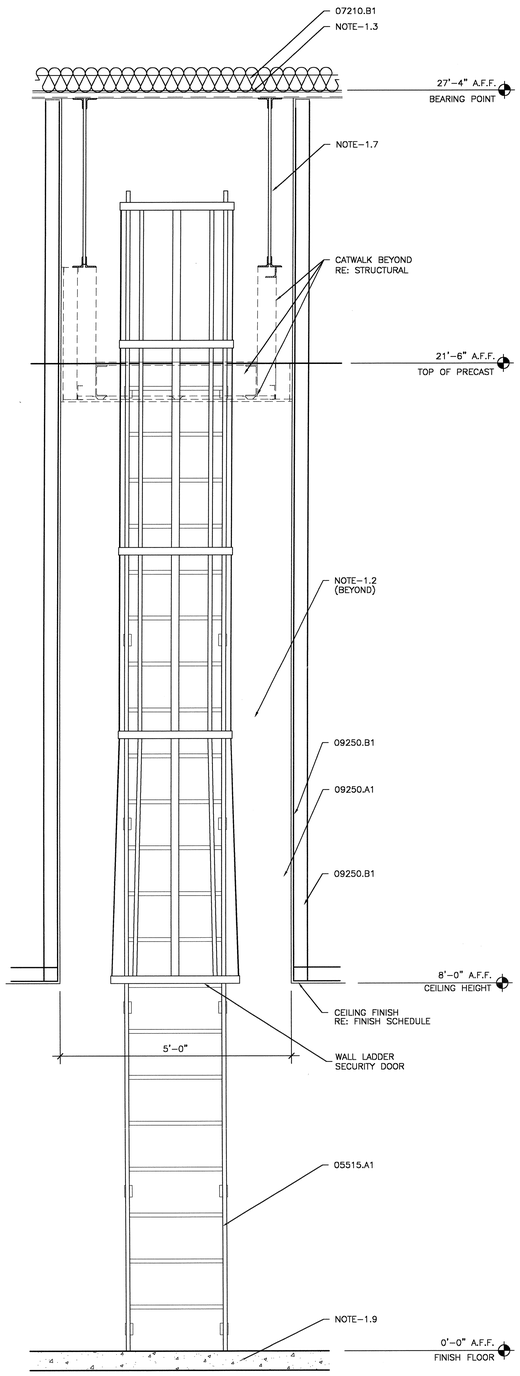

6 WALL SECTION
SCALE: 3/4" = 1'-0"

MATERIAL KEYNOTES

04200.A1	4" VENEER FACE BRICK RE: ELEVATIONS AND DETAILS FOR LOCATIONS OF ACCENT COLORS OF BRICK
04200.A2	SOLDIER COURSE
04200.D1	COPPER FABRIC THRU-WALL FLASHING
04200.D2	WEEP HOLES @ 24" O.C. – OPEN HEAD JOINT TYP.
04200.E1	ADJUSTABLE MASONRY VENEER WALL TIES (FOR PRECAST) @ 16" O.C. VERT. MAX 24" O.C. HORIZ. MAX. HECKMANN "POST-I-TIE" TAPON SCREW AND POST-I-TIE TRIANGLE WIRE TIE OR APPROVED EQUAL
04200.E2	TWO PIECE LADDER TYPE HORIZONTAL REINFORCING WITH ADJUSTABLE EYE AND WIRE TIE
04200.F1	8 X 8 X 16 CONCRETE MASONRY UNITS
04200.G1	CAVITY WALL INSULATION
05515.A1	FIXED ALUMINUM WALL LADDER
06402.A1	1x WOOD TRIM
07120.A1	FLUID APPLIED WATERPROOFING OEVER PRECAST PANEL. SEAL ALL PANEL JOINTS WITH BACKER ROD AND SEALANT
07120.A2	FLUID APPLIED WATERPROOFING OVER CMU
07170.A1	BENTONITE WATERPROOFING
07210.B1	LOOSE FILL INSULATION R-30 MINIMUM
07311.A1	ASPHALT SHINGLES
09250.A1	5/8" GYPSUM BOARD
09250.B1	3-5/8" METAL STUDS
09640.A0	WOOD FLOORING – STAGE
09640.A1	1X TREATED SLEEPERS
09640.A2	TREATED BLOCKING
09640.A3	PLYWOOD
09640.B1	WOOD TREAD (MATCH STAGE FLOORING)
09640.B2	WOOD RISER (MATCH STAGE FLOORING)
09642.A0	WOOD GYMNASIUM FLOORING
NOTE-1.1	PRE-ENGINEERED ROOF TRUSS RE: STRUCTURAL
NOTE-1.2	PRECAST CONCRETE PANEL RE: STRUCTURAL
NOTE-1.3	METAL ROOF DECK RE: STRUCTURAL
NOTE-1.6	STEEL ANGLE RE: STRUCTURAL
NOTE-1.7	STEEL JOIST RE: STRUCTURAL
NOTE-1.8	FOUNDATION RE: STRUCTURAL
NOTE-1.9	CONCRETE SLAB RE: STRUCTURAL

KEY PLAN

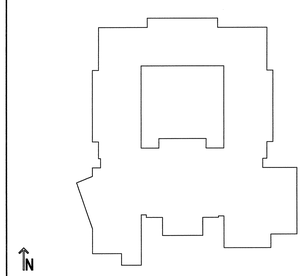

USE OF ARCHITECT'S DRAWINGS, SPECIFICATIONS AND OTHER DOCUMENTS

THE DRAWINGS, SPECIFICATIONS AND OTHER DOCUMENTS PREPARED BY THE ARCHITECT FOR THIS PROJECT ARE INSTRUMENTS OF THE ARCHITECT'S SERVICE FOR USE SOLELY WITH RESPECT TO THIS PROJECT AND, UNLESS OTHERWISE PROVIDED, THE ARCHITECT SHALL BE DEEMED THE AUTHOR OF THESE DOCUMENTS AND SHALL RETAIN ALL COMMON LAW, STATUTORY AND OTHER RESERVED RIGHTS, INCLUDING REPRODUCIBLE COPIES, OF THE ARCHITECT'S DRAWINGS, SPECIFICATIONS AND OTHER DOCUMENTS FOR INFORMATION AND REFERENCE IN CONNECTION WITH THE OWNER'S USE AND OCCUPANCY OF THE PROJECT. THE ARCHITECT'S DRAWINGS, SPECIFICATIONS OR OTHER DOCUMENTS SHALL NOT BE USED BY THE OWNER OR OTHERS ON OTHER PROJECTS, FOR ADDITIONS TO THIS PROJECT OR FOR COMPLETION OF THIS PROJECT BY OTHERS, UNLESS THE ARCHITECT IS ADJUDGED TO BE IN DEFAULT UNDER THIS AGREEMENT, EXCEPT BY AGREEMENT IN WRITING AND WITH APPROPRIATE COMPENSATION TO THE ARCHITECT.

NO.	DATE	REVISION/SUBMISSION
1	11/12/04	FIRE MARSHAL AND C.P. REVISIONS

McKINLEY MIDDLE MAGNET SCHOOL

1550 EDDIE ROBINSON SR. DRIVE
BATON ROUGE, LOUISIANA 70802

Robert M. Coleman & Partners Architects A.I.A.
3377 North Boulevard
Baton Rouge, Louisiana 70808
U.S.A.
tel 225.387.4414
fax 225.387.4693

WALL SECTIONS/DETAILS

PROJECT NO. 03048	SHEET NO.. A8.7
DRAWN BY CS	
CHECKED BY JS	
DATE October 15, 2004	OF

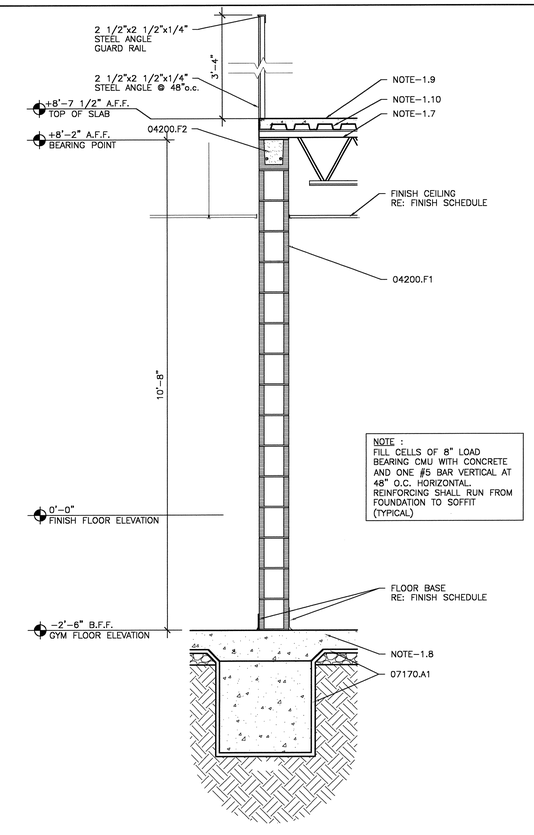

1 WALL SECTION
SCALE 3/4" = 1'-0"

NOTE:
IN LOAD BEARING CMU WALLS, REFER TO STRUCTURAL FOR LOCATION OF REBAR AND CONCRETE FILLED CELLS.

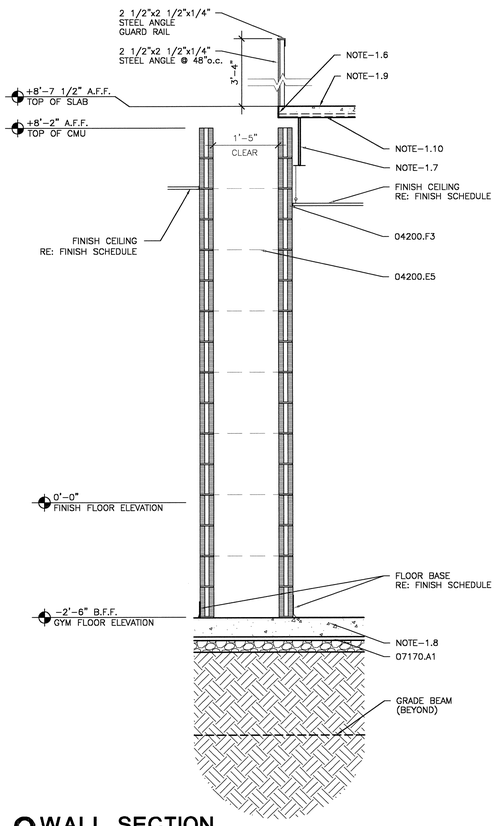

2 WALL SECTION
SCALE 3/4" = 1'-0"

NOTE:
PROVIDE A SUBSTRATE SUITABLE TO RECEIVE BENTONITE WATER PROOFING ACCORDING TO MANUFACTURER'S RECOMMENDATIONS. (TYPICAL)

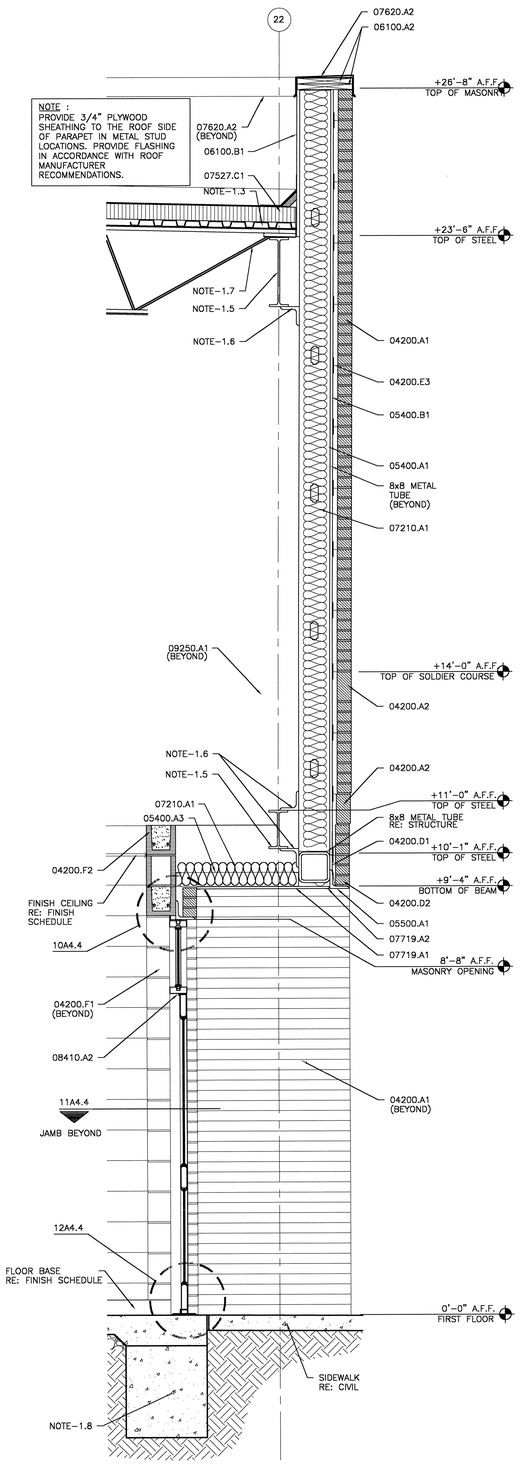

3 WALL SECTION AT CORRIDOR 010
SCALE: 3/4" = 1'-0"

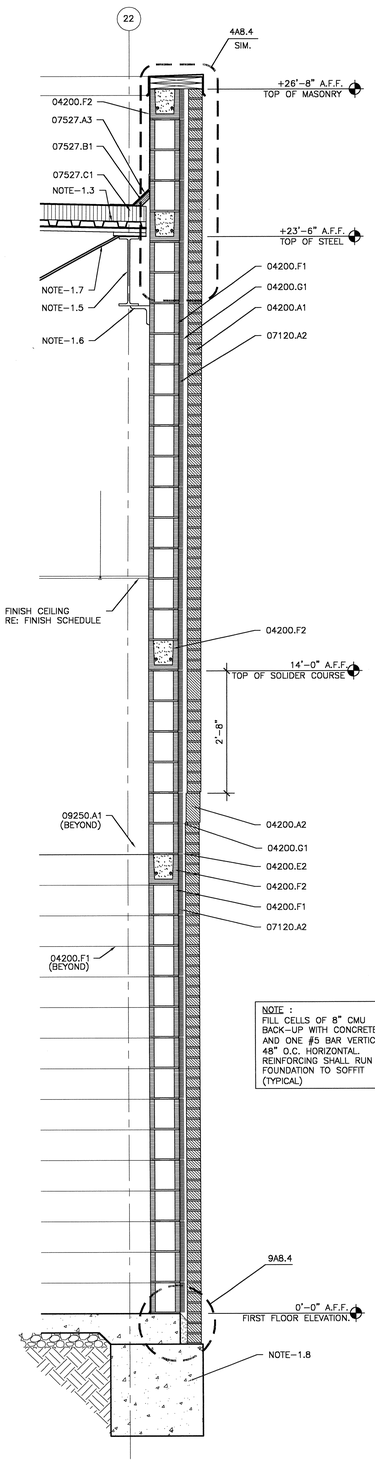

4 WALL SECTION
SCALE: 3/4" = 1'-0"

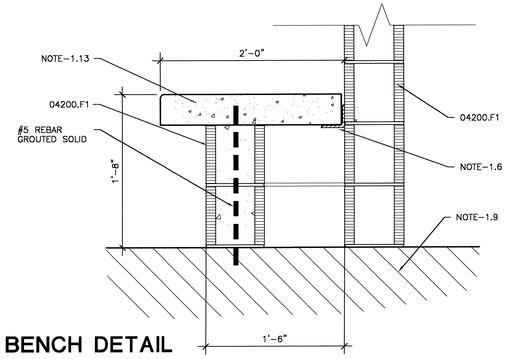

5 BENCH DETAIL
SCALE: 1 1/2" = 1'-0"

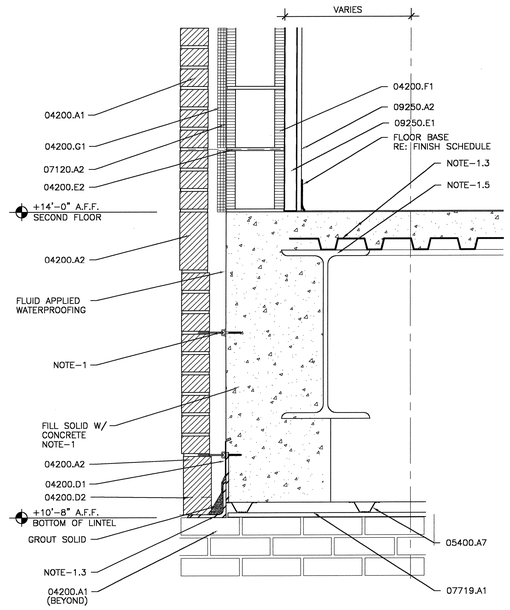

6 WALL DETAIL
SCALE: 1 1/2" = 1'-0"

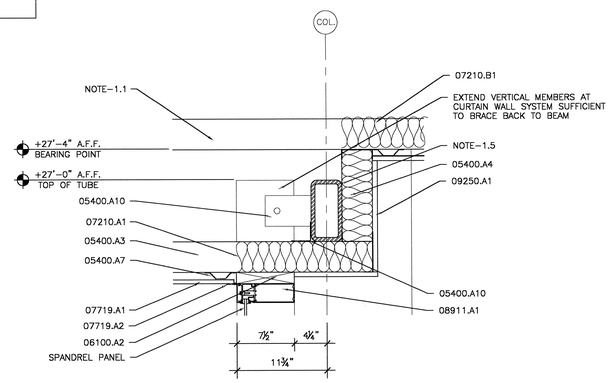

7 WALL DETAIL
SCALE: 1 1/2" = 1'-0"

0 8" 1'-4" 2'-8"
SCALE: 3/4" = 1'-0"

MATERIAL KEYNOTES

04200.A1	4" VENEER FACE BRICK RE: ELEVATIONS AND DETAILS FOR LOCATIONS OF ACCENT COLORS OF BRICK
04200.A2	SOLDIER COURSE
04200.D1	COPPER FABRIC THRU-WALL FLASHING
04200.D2	WEEP HOLES @ 24" O.C. - OPEN HEAD JOINT TYP.
04200.E2	TWO PIECE LADDER TYPE HORIZONTAL REINFORCING WITH ADJUSTABLE EYE AND WIRE TIE
04200.E3	ADJUSTABLE MASONRY VENEER WALL TIES @ 16" O.C. VERT. MAX. 24" O.C. HORIZ. MAX
04200.E5	LADDER TYPE HORIZONTAL REINFORCING @ 16" o.c. VERTICAL TYPICAL
04200.F1	8 X 8 X 16 CONCRETE MASONRY UNITS
04200.F2	CONCRETE MASONRY U-BLOCK CONCRETE FILLED WITH 2- #5 REBAR CONT.
04200.F3	4" X 8" X 16" CONCRETE MASONRY BLOCK
04200.G1	CAVITY WALL INSULATION
05400.A1	6" METAL STUDS @ 16" O.C.
05400.A10	3" X 3" 16 GA. COLD-FORMED STEEL ANGLE
05400.A3	3-5/8" METAL STUDS
05400.A4	3-5/8" METAL STUD TRACK
05400.A7	7/8" HAT CHANNELS @ 24" O. C. VER
05400.B1	GYPSUM SHEATHING
05500.A1	STEEL ANGLE LINTEL
06100.A2	PRESSURE TREATED 2X WOOD BLOCKING
06100.B1	3/4" PLYWOOD SHEATHING
07120.A2	FLUID APPLIED WATERPROOFING OVER CMU
07170.A1	BENTONITE WATERPROOFING
07210.A1	8" BATT. INSULATION
07210.B1	LOOSE FILL INSULATION R-30 MINIMUM
07527.A3	SBS-MODIFIED BITUMEN STRIP FLASHING IN ACCORDANCE TO MANUFACTURER STANDARDS
07527.B1	CANT STRIP
07527.C1	NSULATION BOARD - MULTI-LAYERED
07620.A2	PREFINISHED METAL COPING WITH CONTINUOUS HOLD DOWN CLEAT
07719.A1	PREFINISHED METAL SOFFIT PANEL
07719.A2	PREFINISH "J" CLOSURE TO MATCH PANEL
08410.A2	ALUMINUM STOREFRONT ENTRANCE DOORS & FRAME (EXTERIOR)
08911.A1	ALUMINUM CURTAIN WALLS
09250.A1	5/8" GYPSUM BOARD
09250.A2	5/8" IMPACT RESISTANT GYPSUM BOARD
09250.E1	1-1/2" METAL FURRING CHANNEL @ 16" O.C.
NOTE-1	RE: STRUCTURAL
NOTE-1.1	PRE-ENGINEERED ROOF TRUSS RE: STRUCTURAL
NOTE-1.10	STEEL DECKING RE: STRUCTURAL
NOTE-1.13	PRE-CAST CONCRETE BENCH RE: STRUCTURE
NOTE-1.3	METAL ROOF DECK RE: STRUCTURAL
NOTE-1.5	STEEL BEAM RE: STRUCTURAL
NOTE-1.6	STEEL ANGLE RE: STRUCTURAL
NOTE-1.7	STEEL JOIST RE: STRUCTURAL
NOTE-1.8	FOUNDATION RE: STRUCTURAL
NOTE-1.9	CONCRETE SLAB RE: STRUCTURAL

KEY PLAN

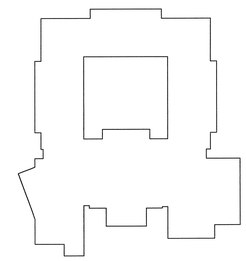

USE OF ARCHITECT'S DRAWINGS, SPECIFICATIONS AND OTHER DOCUMENTS

THE DRAWINGS, SPECIFICATIONS AND OTHER DOCUMENTS PREPARED BY THE ARCHITECT FOR THIS PROJECT ARE INSTRUMENTS OF THE ARCHITECT'S SERVICE FOR USE SOLELY WITH RESPECT TO THIS PROJECT AND, UNLESS OTHERWISE PROVIDED, THE ARCHITECT SHALL BE DEEMED THE AUTHOR OF THESE DOCUMENTS AND SHALL RETAIN ALL COMMON LAW, STATUTORY AND OTHER RESERVED RIGHTS, INCLUDING REPRODUCIBLE COPIES, OF THE ARCHITECT'S DRAWINGS, SPECIFICATIONS AND OTHER DOCUMENTS FOR INFORMATION AND REFERENCE IN CONNECTION WITH THE OWNER'S USE AND OCCUPANCY OF THE PROJECT. THE ARCHITECT'S DRAWINGS, SPECIFICATIONS OR OTHER DOCUMENTS SHALL NOT BE USED BY THE OWNER OR OTHERS ON OTHER PROJECTS, FOR ADDITIONS TO THIS PROJECT OR FOR COMPLETION OF THIS PROJECT BY OTHERS, UNLESS THE ARCHITECT IS ADJUDGED TO BE IN DEFAULT UNDER THIS AGREEMENT, EXCEPT BY AGREEMENT IN WRITING AND WITH APPROPRIATE COMPENSATION TO THE ARCHITECT.

NO.	DATE	REVISION/SUBMISSION
1	11/12/04	FIRE MARSHAL AND C.P. REVISIONS

McKINLEY MIDDLE MAGNET SCHOOL

1550 EDDIE ROBINSON SR. DRIVE
BATON ROUGE, LOUISIANA 70802

Robert M. Coleman Architects & Partners A.I.A.
3377 North Boulevard
Baton Rouge, Louisiana
70806
U.S.A.
tel 225.387.4414
fax 225.387.4693

WALL SECTIONS

PROJECT NO. 03048	SHEET NO.. A8.8
DRAWN BY CS, JM	
CHECKED BY JS	
DATE October 15, 2004	OF

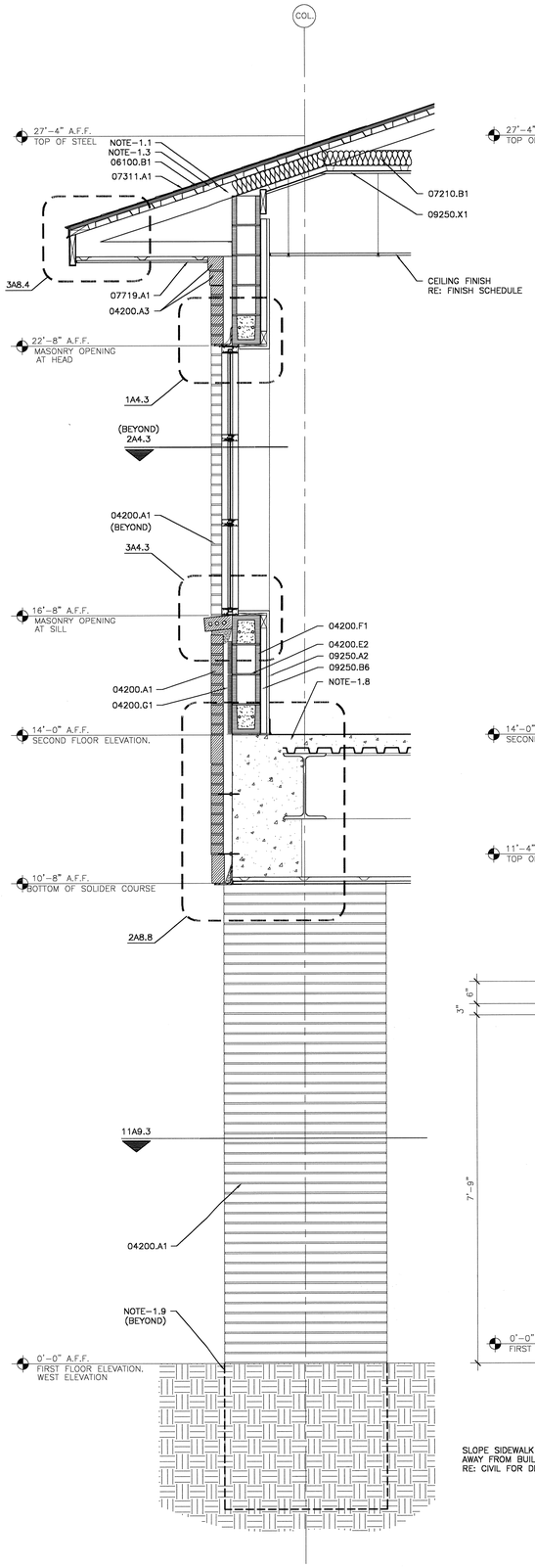

1 WALL SECTION IN COURT YARD
SCALE 3/4" = 1'-0"

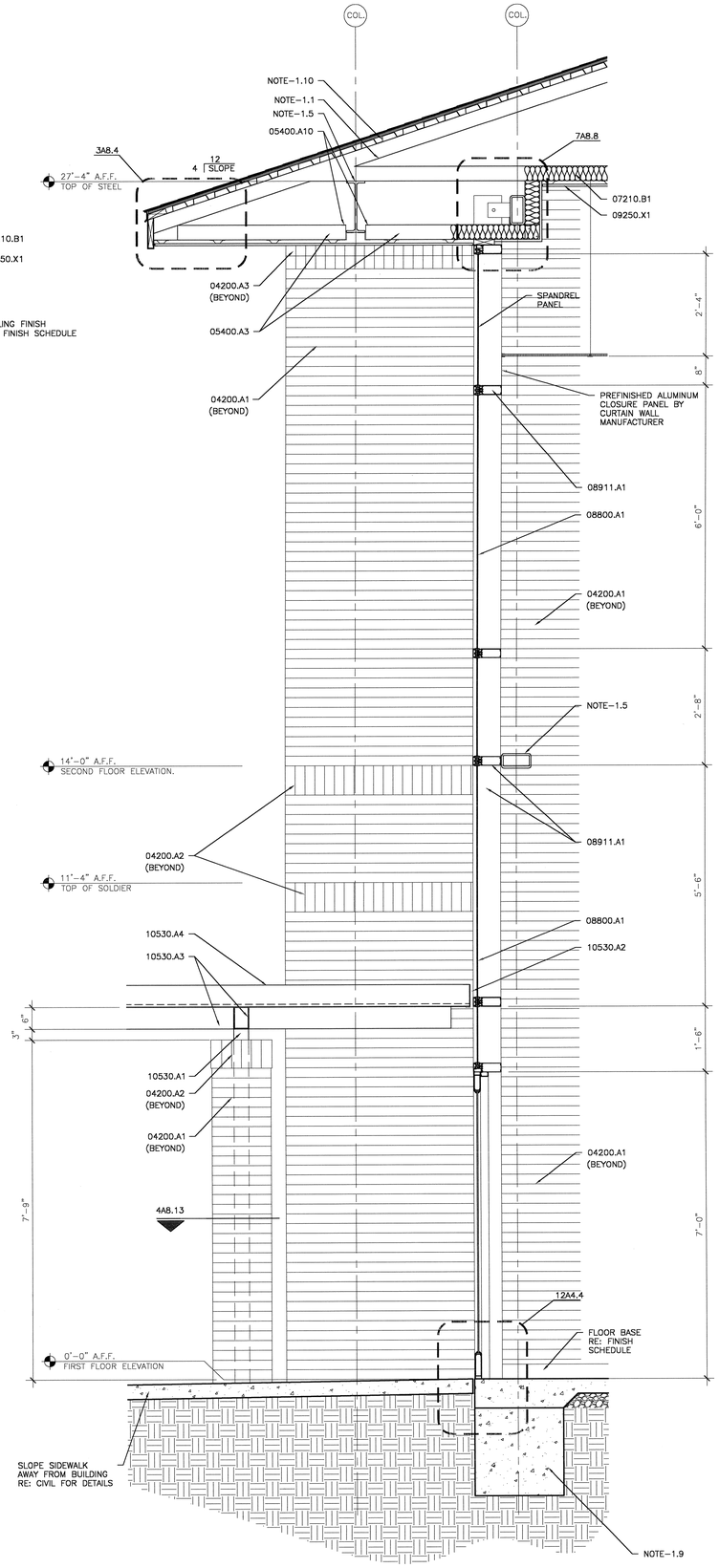

2 WALL SECTION
SCALE 3/4" = 1'-0"

NOTE:
CONTRACTOR TO COORDINATE LOCATION AND SIZE OF OPENING AND FLASHING IN BRICK FOR DRAINABLE COLUMN WITH CANOPY MANUFACTURER'S RECOMMENDATIONS.

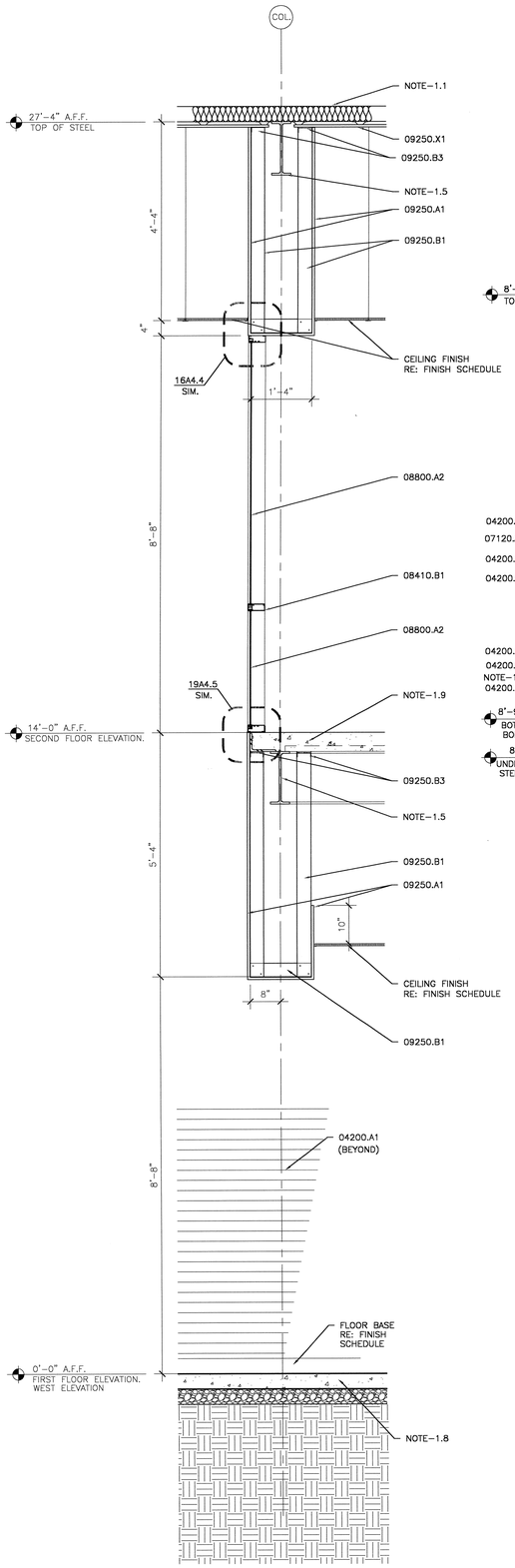

3 WALL SECTION
SCALE 3/4" = 1'-0"

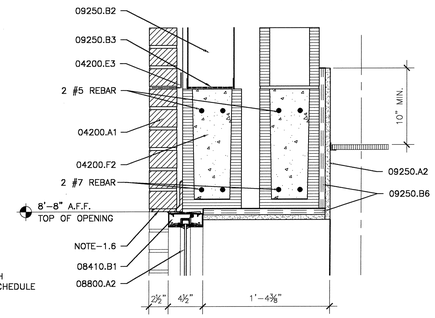

4 WALL SECTION
SCALE: 1 1/2" = 1'-0"

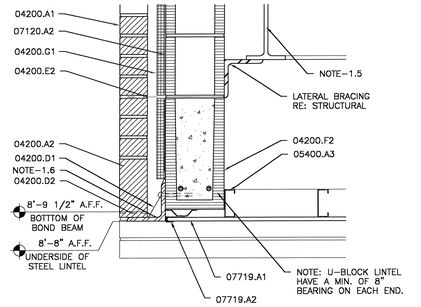

5 WALL DETAIL
SCALE: 1 1/2" = 1'-0"

MATERIAL KEYNOTES

04200.A1	4" VENEER FACE BRICK RE: ELEVATIONS AND DETAILS FOR LOCATIONS OF ACCENT COLORS OF BRICK
04200.A2	SOLDIER COURSE
04200.A3	ROWLOCK COURSE
04200.D1	COPPER FABRIC THRU-WALL FLASHING
04200.D2	WEEP HOLES @ 24" O.C. – OPEN HEAD JOINT TYP.
04200.E2	TWO PIECE LADDER TYPE HORIZONTAL REINFORCING WITH ADJUSTABLE EYE AND WIRE TIE
04200.E3	ADJUSTABLE MASONRY VENEER WALL TIES @ 16" O.C. VERT. MAX. 24" O.C. HORIZ. MAX
04200.F1	8 X 8 X 16 CONCRETE MASONRY UNITS
04200.F2	CONCRETE MASONRY U-BLOCK CONCRETE FILLED WITH 2– #5 REBAR CONT.
04200.G1	CAVITY WALL INSULATION
05400.A10	3" X 3" 16 GA. COLD-FORMED STEEL ANGLE
05400.A3	3–5/8" METAL STUDS
06100.B1	3/4" PLYWOOD SHEATHING
07120.A2	FLUID APPLIED WATERPROOFING OVER CMU
07210.B1	LOOSE FILL INSULATION R–30 MINIMUM
07311.A1	ASPHALT SHINGLES
07719.A1	PREFINISHED METAL SOFFIT PANEL
07719.A2	PREFINISH "J" CLOSURE TO MATCH PANEL
08410.B1	ALUMINUM STOREFRONT FRAMING (INTERIOR)
08800.A1	1/4" TINTED AND HEAT TREATED FLOAT GLASS
08800.A2	1/4" TEMPERED GLASS – INTERIOR GLAZING
08911.A1	ALUMINUM CURTAIN WALLS
09250.A1	5/8" GYPSUM BOARD
09250.A2	5/8" IMPACT RESISTANT GYPSUM BOARD
09250.B1	3–5/8" METAL STUDS
09250.B2	6" METAL STUDS
09250.B3	METAL STUD TRACK
09250.B6	1–5/8" METAL STUDS @ 16" O.C.
09250.X1	INSTALL 7/8" HAT CHANNELS @ 16 O.C. ON UNDERSIDE OF ALL PRE–ENGINEERED TRUSSES. INSTALL 5/8" GYPSUM BOARD ACROSS ENTIRE UNDERSIDE OF TRUSSES. TAPE AND FLOAT BEFORE ERECTING PARTITIONS TO UNDERSIDE OF GYPSUM BOARD.
10530.A1	WALKWAY COVER COLUMN (DRAINABLE)
10530.A2	WALKWAY COVER FASCIA
10530.A3	WALKWAY COVER BEAM
10530.A4	WALKWAY COVER DECK
NOTE–1.1	PRE–ENGINEERED ROOF TRUSS RE: STRUCTURAL
NOTE–1.10	STEEL DECKING RE: STRUCTURAL
NOTE–1.3	METAL ROOF DECK RE: STRUCTURAL
NOTE–1.5	STEEL BEAM RE: STRUCTURAL
NOTE–1.6	STEEL ANGLE RE: STRUCTURAL
NOTE–1.8	FOUNDATION RE: STRUCTURAL
NOTE–1.9	CONCRETE SLAB RE: STRUCTURAL

KEY PLAN

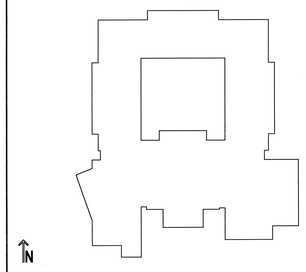

USE OF ARCHITECT'S DRAWINGS, SPECIFICATIONS AND OTHER DOCUMENTS

THE DRAWINGS, SPECIFICATIONS AND OTHER DOCUMENTS PREPARED BY THE ARCHITECT FOR THIS PROJECT ARE INSTRUMENTS OF THE ARCHITECT'S SERVICE FOR USE SOLELY WITH RESPECT TO THIS PROJECT AND, UNLESS OTHERWISE PROVIDED, THE ARCHITECT SHALL BE DEEMED THE AUTHOR OF THESE DOCUMENTS AND SHALL RETAIN ALL COMMON LAW, STATUTORY AND OTHER RESERVED RIGHTS, INCLUDING REPRODUCIBLE COPIES, OF THE ARCHITECT'S DRAWINGS, SPECIFICATIONS AND OTHER DOCUMENTS FOR INFORMATION AND REFERENCE IN CONNECTION WITH THE OWNER'S USE AND OCCUPANCY OF THE PROJECT. THE ARCHITECT'S DRAWINGS, SPECIFICATIONS OR OTHER DOCUMENTS SHALL NOT BE USED BY THE OWNER OR OTHERS ON OTHER PROJECTS, FOR ADDITIONS TO THIS PROJECT OR FOR COMPLETION OF THIS PROJECT BY OTHERS, UNLESS THE ARCHITECT IS ADJUDGED TO BE IN DEFAULT UNDER THIS AGREEMENT, EXCEPT BY AGREEMENT IN WRITING AND WITH APPROPRIATE COMPENSATION TO THE ARCHITECT.

NO.	DATE	REVISION/SUBMISSION
1	11/12/04	FIRE MARSHAL AND C.P. REVISIONS

McKINLEY MIDDLE MAGNET SCHOOL

1550 EDDIE ROBINSON SR. DRIVE
BATON ROUGE, LOUISIANA 70802

Robert M. Coleman & Partners Architects A.I.A.
3377 North Boulevard
Baton Rouge, Louisiana
70806
U.S.A.
tel 225.387.4414
fax 225.387.4663

WALL SECTIONS

PROJECT NO. 0304B	SHEET NO.. A8.9
DRAWN BY CS, BH, JM	
CHECKED BY JS	
DATE October 15, 2004	OF

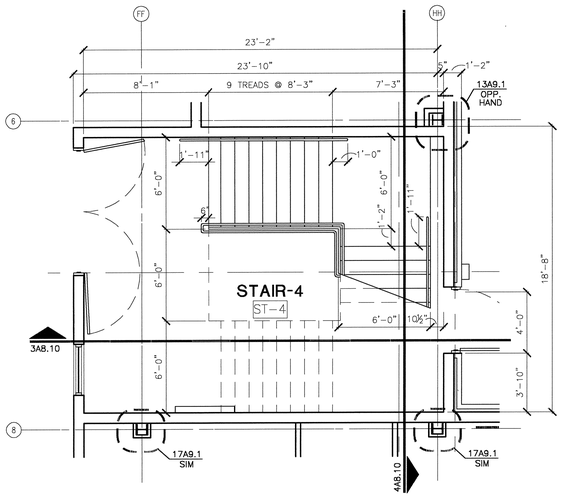

1 ENLARGED STAIR - FIRST FLOOR
SCALE: 1/4" = 1'-0"

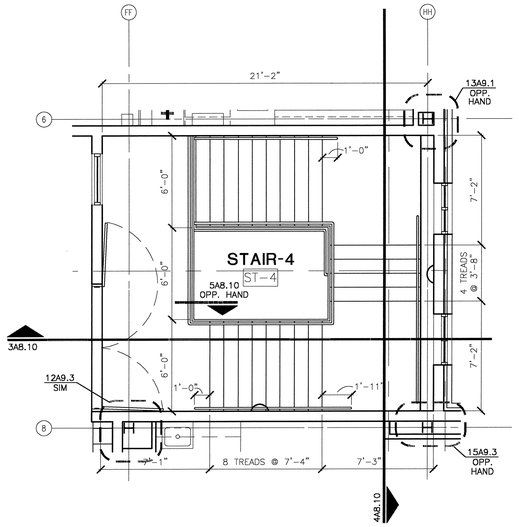

2 ENLARGED STAIR - SECOND FLOOR
SCALE: 1/4" = 1'-0"

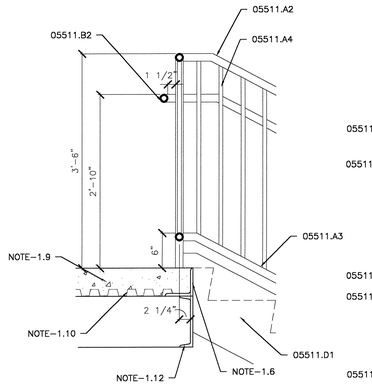

5 STAIR-5 SECTION
SCALE: 1" = 1'-0"

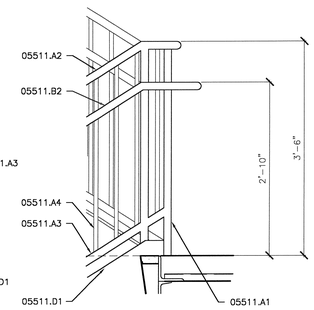

6 STAIR-5 SECTION
SCALE: 1" = 1'-0"

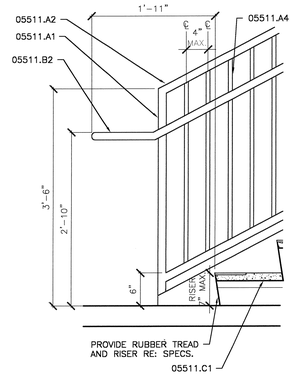

7 STAIR-5 SECTION
SCALE: 1" = 1'-0"

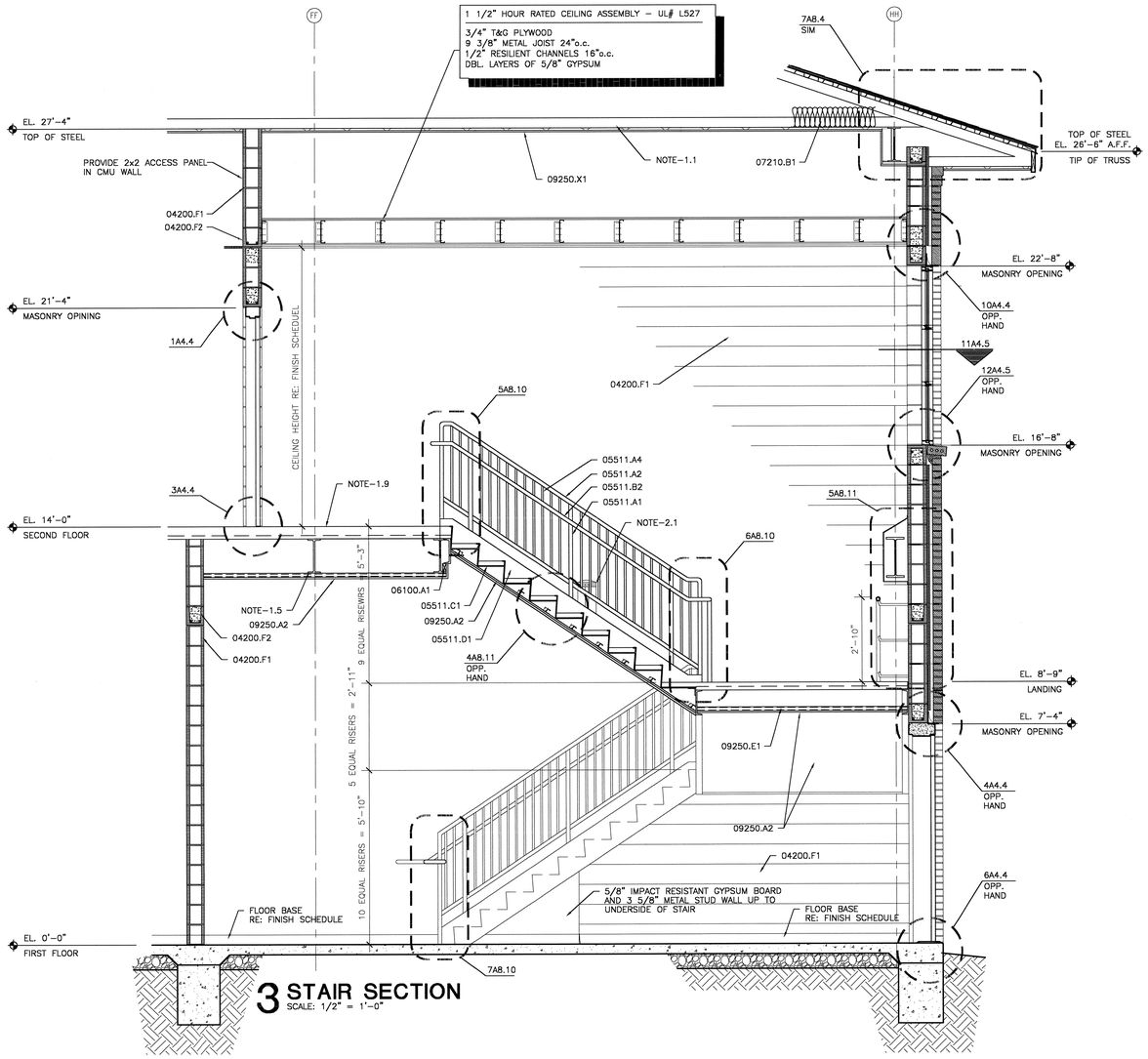

3 STAIR SECTION
SCALE: 1/2" = 1'-0"

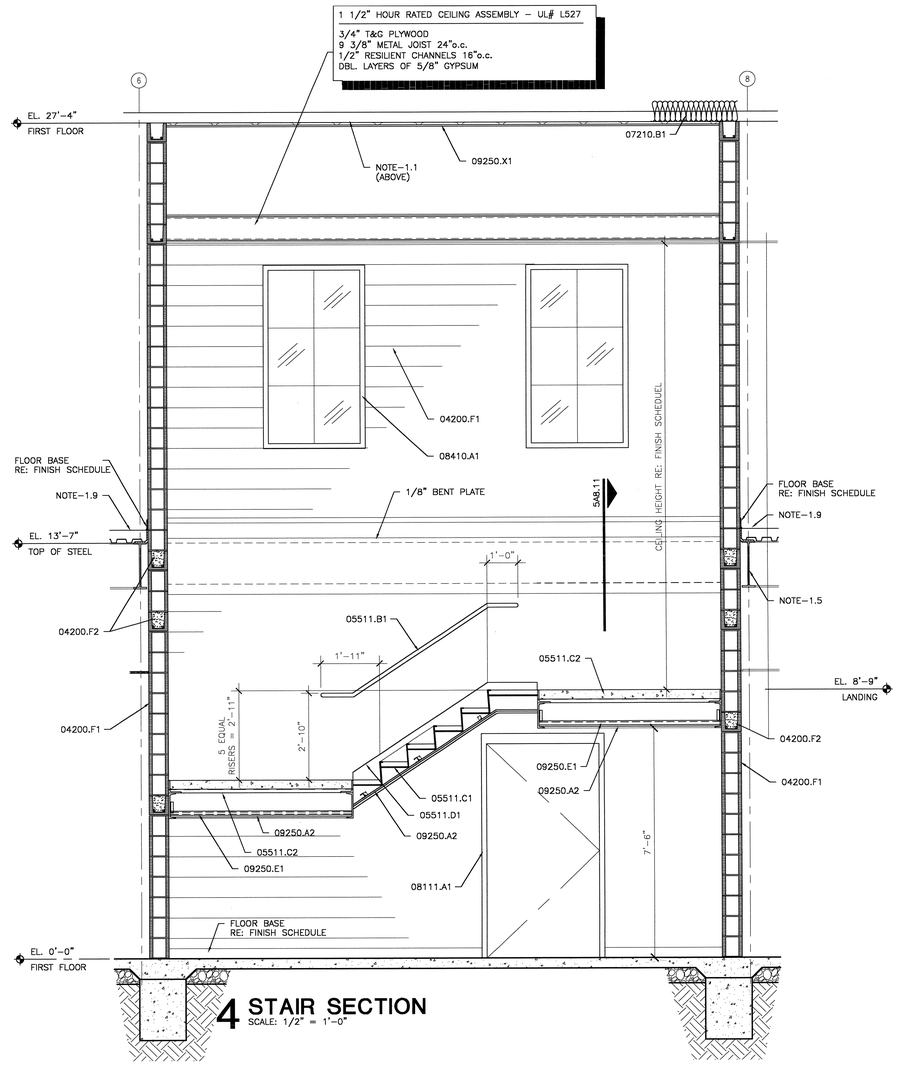

4 STAIR SECTION
SCALE: 1/2" = 1'-0"

MATERIAL KEYNOTES

04200.F1	8 X 8 X 16 CONCRETE MASONRY UNITS
04200.F2	CONCRETE MASONRY U–BLOCK CONCRETE FILLED WITH 2– #5 REBAR CONT.
05511.A1	1 1/2" DIA. STEEL POST
05511.A2	1 1/2" DIA. STEEL TOP RAIL
05511.A3	1 1/2" DIA. STEEL BOTTOM RAIL
05511.A4	3/4" STEEL BALUSTEER @ 4" O.C. MAX.
05511.B1	1 1/2" O.D. STEEL HANDRAIL WALL MOUNTED
05511.B2	1 1/2" O.D. STEEL HANDRAIL
05511.C1	CONCRETE FILLED METAL PAN STAIR TREAD
05511.C2	CONCRETE FILLED METAL STAIR LANDING
05511.D1	METAL STAIR STRINGER STEEL CHANNEL RE: STRUCTURAL
06100.A1	2X WOOD BLOCKING
07210.B1	LOOSE FILL INSULATION R–30 MINIMUM
08111.A1	HOLLOW METAL FRAME
08410.A1	ALUMINUM STOREFRONT FRAMING (EXTERIOR WINDOWS)
09250.A2	5/8" IMPACT RESISTANT GYPSUM BOARD
09250.E1	1–1/2" METAL FURRING CHANNEL @ 16" O.C.
09250.X1	INSTALL 7/8" HAT CHANNELS @ 16 O.C. ON UNDERSIDE OF ALL PRE–ENGINEERED TRUSSES. INSTALL 5/8" GYPSUM BOARD ACROSS ENTIRE UNDERSIDE OF TRUSSES. TAPE AND FLOAT BEFORE ERECTING PARTITIONS TO UNDERSIDE OF GYPSUM BOARD.
NOTE–1.1	PRE–ENGINEERED ROOF TRUSS RE: STRUCTURAL
NOTE–1.10	STEEL DECKING RE: STRUCTURAL
NOTE–1.12	STEEL CHANNEL RE: STRUCTURAL
NOTE–1.5	STEEL BEAM RE: STRUCTURAL
NOTE–1.6	STEEL ANGLE RE: STRUCTURAL
NOTE–1.9	CONCRETE SLAB RE: STRUCTURAL
NOTE–2.1	LIGHT FIXTURE RE: ELECTRICAL

KEY PLAN

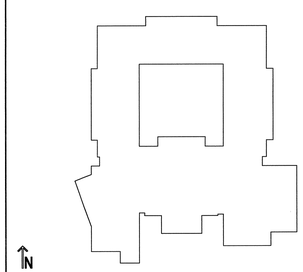

USE OF ARCHITECT'S DRAWINGS, SPECIFICATIONS AND OTHER DOCUMENTS

THE DRAWINGS, SPECIFICATIONS AND OTHER DOCUMENTS PREPARED BY THE ARCHITECT FOR THIS PROJECT ARE INSTRUMENTS OF THE ARCHITECT'S SERVICE FOR USE SOLELY WITH RESPECT TO THIS PROJECT AND, UNLESS OTHERWISE PROVIDED, THE ARCHITECT SHALL BE DEEMED THE AUTHOR OF THESE DOCUMENTS AND SHALL RETAIN ALL COMMON LAW, STATUTORY AND OTHER RESERVED RIGHTS, INCLUDING REPRODUCIBLE COPIES, OF THE ARCHITECT'S DRAWINGS, SPECIFICATIONS AND OTHER DOCUMENTS FOR INFORMATION AND REFERENCE IN CONNECTION WITH THE OWNER'S USE AND OCCUPANCY OF THE PROJECT. THE ARCHITECT'S DRAWINGS, SPECIFICATIONS OR OTHER DOCUMENTS SHALL NOT BE USED BY THE OWNER OR OTHERS ON OTHER PROJECTS, FOR ADDITIONS TO THIS PROJECT OR FOR COMPLETION OF THIS PROJECT BY OTHERS, UNLESS THE ARCHITECT IS ADJUDGED TO BE IN DEFAULT UNDER THIS AGREEMENT, EXCEPT BY AGREEMENT IN WRITING AND WITH APPROPRIATE COMPENSATION TO THE ARCHITECT.

NO.	DATE	REVISION/SUBMISSION
1	11/12/04	FIRE MARSHAL AND C.P. REVISIONS

McKINLEY MIDDLE MAGNET SCHOOL

1550 EDDIE ROBINSON SR. DRIVE
BATON ROUGE, LOUISIANA 70802

Robert M. Coleman & Partners Architects A.I.A.
3377 North Boulevard
Baton Rouge, Louisiana 70806 U.S.A.
tel 225.387.4414
fax 225.387.4693

BUILDING SECTIONS

PROJECT NO. 03048	SHEET NO.. A8.10
DRAWN BY CS, JM	
CHECKED BY JS	
DATE October 15, 2004	_____ OF _____

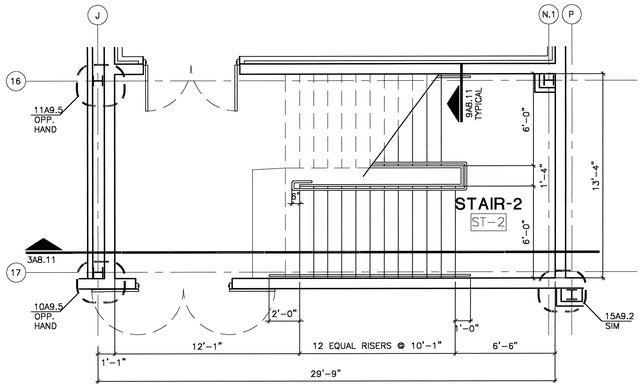

1 STAIR SECTION
SCALE: 1/4" = 1'-0"

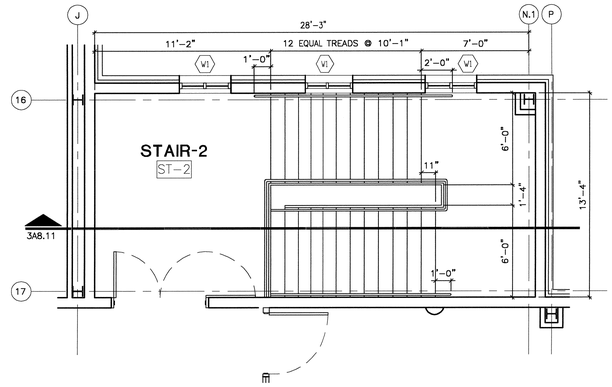

2 STAIR SECTION
SCALE: 1/4" = 1'-0"

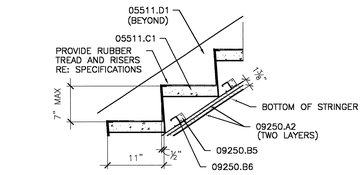

4 TREAD DETAILS
SCALE: 1" = 1'-0"

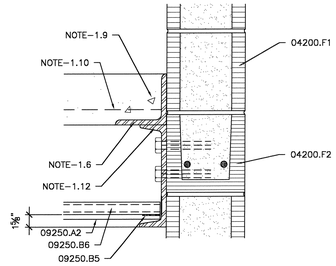

6 WALL DETAIL
SCALE: 1 1/2" = 1'-0"

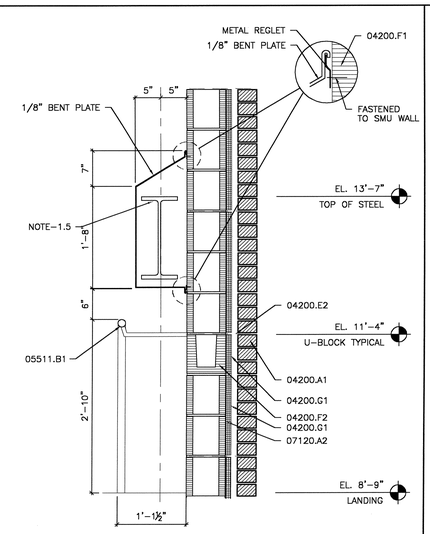

5 WALL DETAILS
SCALE: 1 1/2" = 1'-0"

NOTE: ALL CORNERS AND EDGES ARE TO BE GROUND DOWN ON THE METAL PLATE AS TO LEAVE NO SHARP CORNERS OR EDGES

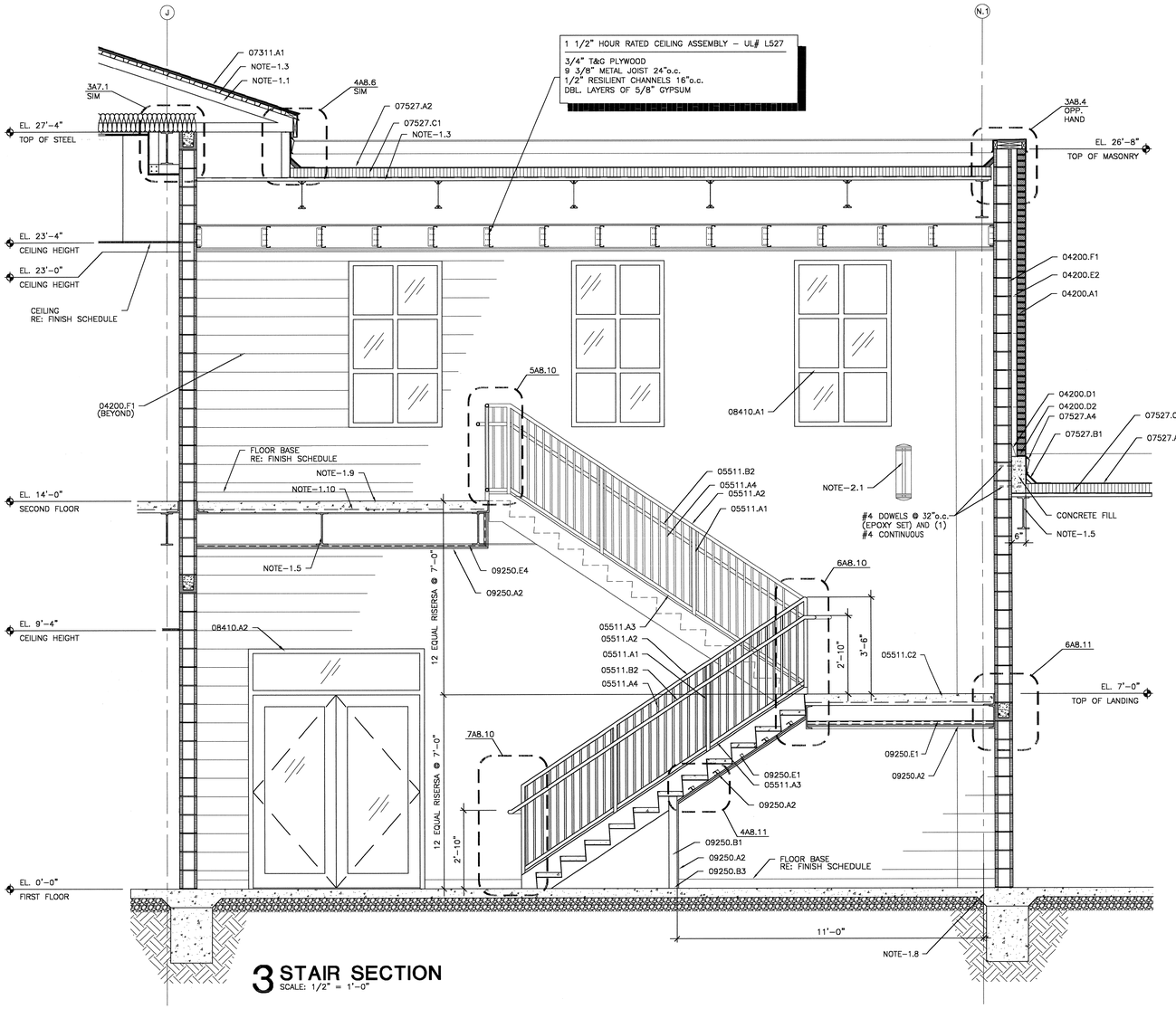

3 STAIR SECTION
SCALE: 1/2" = 1'-0"

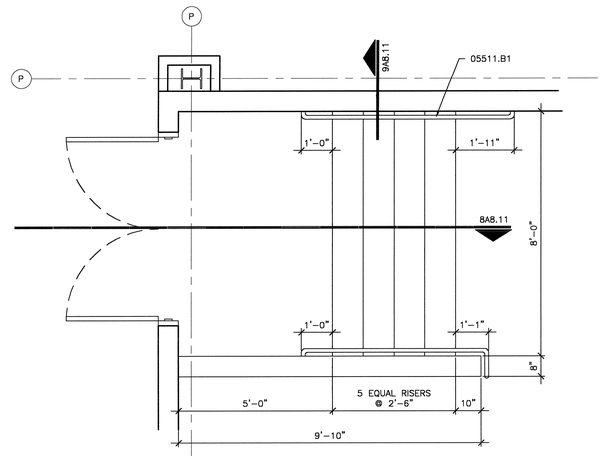

7 ENLARGED STAIR
SCALE: 1/2" = 1'-0"

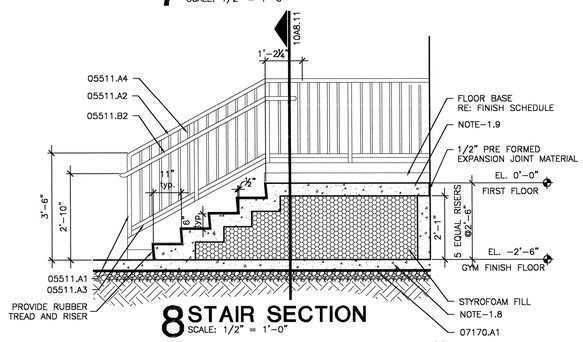

8 STAIR SECTION
SCALE: 1/2" = 1'-0"

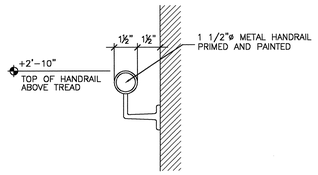

9 HANDRAIL DETAIL
SCALE: 3" = 1'-0"

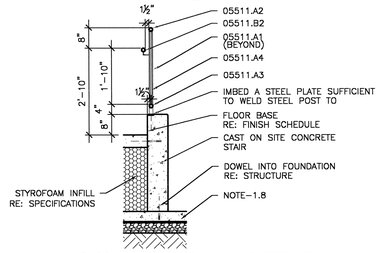

10 HANDRAIL DETAIL
SCALE: 1/2" = 1'-0"

MATERIAL KEYNOTES

04200.A1	4" VENEER FACE BRICK RE: ELEVATIONS AND DETAILS FOR LOCATIONS OF COLORS OF BRICK
04200.E2	TWO PIECE LADDER TYPE HORIZONTAL REINFORCING WITH ADJUSTABLE EYE AND WIRE TIE
04200.F1	8 X 8 X 16 CONCRETE MASONRY UNITS
04200.F2	CONCRETE MASONRY U-BLOCK CONCRETE FILLED WITH 2- #5 REBAR CONT.
04200.G1	CAVITY WALL INSULATION
05511.A1	1 1/2" DIA. STEEL POST
05511.A2	1 1/2" DIA. STEEL TOP RAIL
05511.A3	1 1/2" DIA. STEEL BOTTOM RAIL
05511.A4	3/4" STEEL BALUSTEER @ 4" O.C. MAX.
05511.B1	1 1/2" O.D. STEEL HANDRAIL WALL MOUNTED
05511.B2	1 1/2" O.D. STEEL HANDRAIL
05511.C1	CONCRETE FILLED METAL PAN STAIR TREAD
05511.C2	CONCRETE FILLED METAL STAIR LANDING
05511.D1	METAL STAIR STRINGER STEEL CHANNEL RE: STRUCTURAL
07120.A2	FLUID APPLIED WATERPROOFING OVER CMU
07311.A1	ASPHALT SHINGLES
07527.A2	SBS-MODIFIED BITUMEN CAPSHEET
07527.A4	SBS- MODIFIED BITUMEN COUNTERFLASHING EXTEND UP PARAPET AND ATTACH IN ACCORDANCE TO MANUFACTURER STANDARDS
07527.B1	CANT STRIP
07527.C1	POLY-ISO INSULATION BOARD – MULTI-LAYERED
08410.A1	ALUMINUM STOREFRONT FRAMING (EXTERIOR WINDOWS)
08410.A2	ALUMINUM STOREFRONT ENTRANCE DOORS & FRAME (EXTERIOR)
09250.A2	5/8" IMPACT RESISTANT GYPSUM BOARD
09250.B1	3-5/8" METAL STUDS
09250.B3	METAL STUD TRACK
09250.B5	2-1/2" x 2-1/2" COLD ROLLED ANGLE (20 GA.)
09250.B6	1-5/8" METAL STUDS @ 16" O.C.
09250.E4	7/8" METAL FURRING CHANNEL @ 16" O.C.
NOTE-1.1	PRE-ENGINEERED ROOF TRUSS RE: STRUCTURAL
NOTE-1.10	STEEL DECKING RE: STRUCTURAL
NOTE-1.12	STEEL CHANNEL RE: STRUCTURAL
NOTE-1.3	METAL ROOF DECK RE: STRUCTURAL
NOTE-1.5	STEEL BEAM RE: STRUCTURAL
NOTE-1.6	STEEL ANGLE RE: STRUCTURAL
NOTE-1.8	FOUNDATION RE: STRUCTURAL
NOTE-1.9	CONCRETE SLAB RE: STRUCTURAL
NOTE-2.1	LIGHT FIXTURE RE: ELECTRICAL

USE OF ARCHITECT'S DRAWINGS, SPECIFICATIONS AND OTHER DOCUMENTS

THE DRAWINGS, SPECIFICATIONS AND OTHER DOCUMENTS PREPARED BY THE ARCHITECT FOR THIS PROJECT ARE INSTRUMENTS OF THE ARCHITECT'S SERVICE FOR USE SOLELY WITH RESPECT TO THIS PROJECT AND, UNLESS OTHERWISE PROVIDED, THE ARCHITECT SHALL BE DEEMED THE AUTHOR OF THESE DOCUMENTS AND SHALL RETAIN ALL COMMON LAW, STATUTORY AND OTHER RESERVED RIGHTS, INCLUDING REPRODUCIBLE COPIES. OF THE ARCHITECT'S DRAWINGS, SPECIFICATIONS AND OTHER DOCUMENTS FOR INFORMATION AND REFERENCE IN CONNECTION WITH THE OWNER'S USE AND OCCUPANCY OF THE PROJECT. THE ARCHITECT'S DRAWINGS, SPECIFICATIONS OR OTHER DOCUMENTS SHALL NOT BE USED BY THE OWNER OR OTHERS ON OTHER PROJECTS, FOR ADDITIONS TO THIS PROJECT OR FOR COMPLETION OF THIS PROJECT BY OTHERS, UNLESS THE ARCHITECT IS ADJUDGED TO BE IN DEFAULT UNDER THIS AGREEMENT, EXCEPT BY AGREEMENT IN WRITING AND WITH APPROPRIATE COMPENSATION TO THE ARCHITECT.

NO.	DATE	REVISION/SUBMISSION
1	11/12/04	FIRE MARSHAL AND C.P. REVISIONS

McKINLEY MIDDLE MAGNET SCHOOL

1550 EDDIE ROBINSON SR. DRIVE
BATON ROUGE, LOUISIANA 70802

Robert M. Coleman & Partners Architects A.I.A.
3377 North Boulevard
Baton Rouge, Louisiana 70806
U.S.A.
tel 225.387.4414
fax 225.387.4693

STAIR SECTIONS

PROJECT NO. 03048	SHEET NO.. A8.11
DRAWN BY CS, BH, JM	
CHECKED BY JS	
DATE October 15, 2004	OF

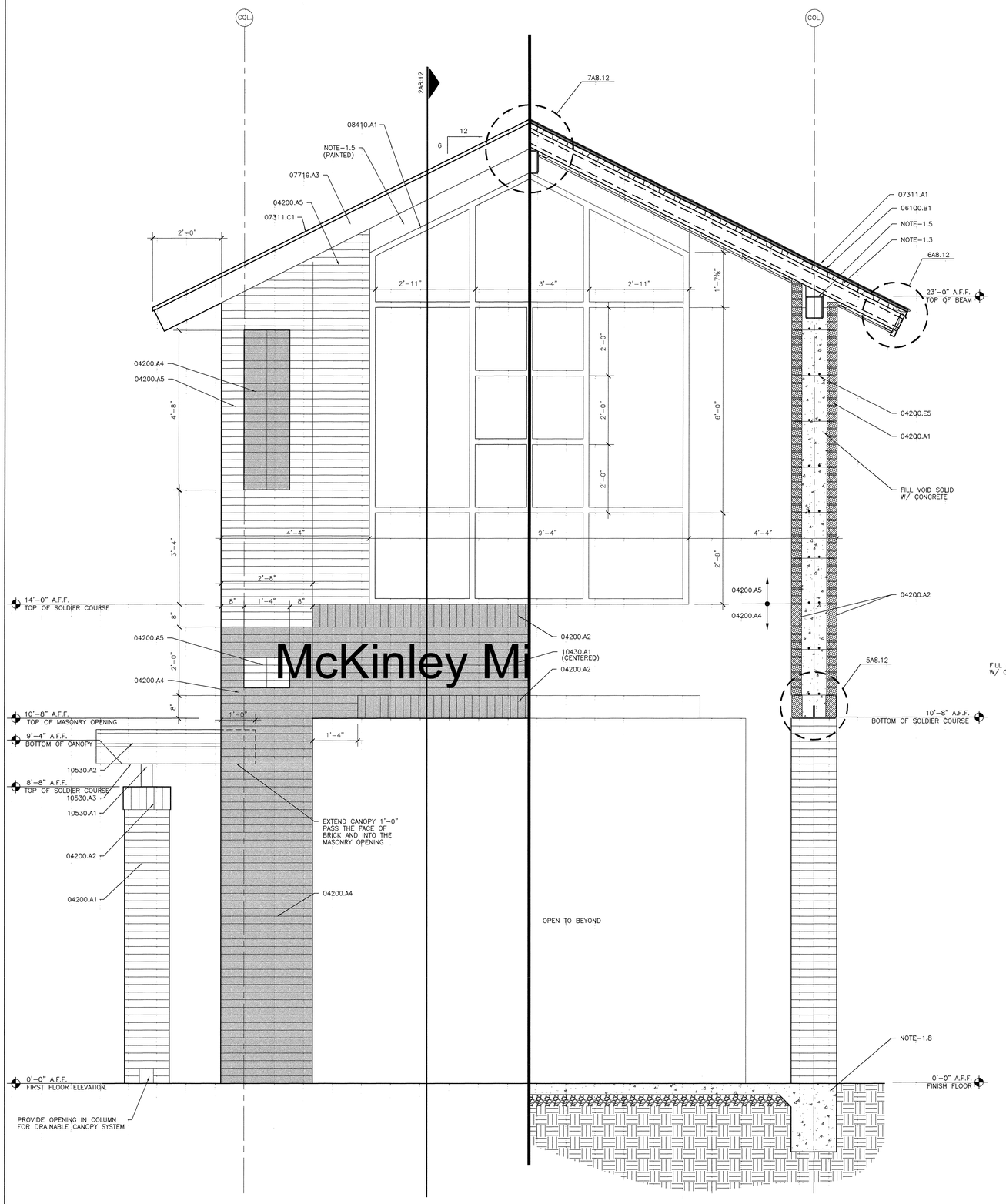

1 PARTIAL CANOPY ELEVATION
SCALE 3/4" = 1'-0"

1b PARTIAL CANOPY SECTION
SCALE 3/4" = 1'-0"

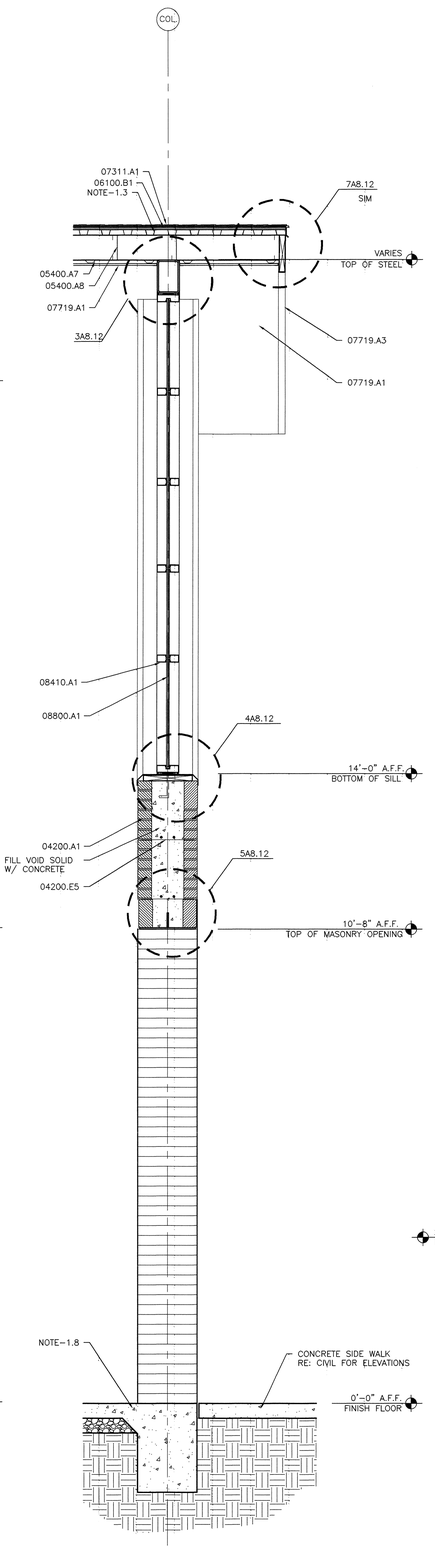

2 WALL SECTION
SCALE 3/4" = 1'-0"

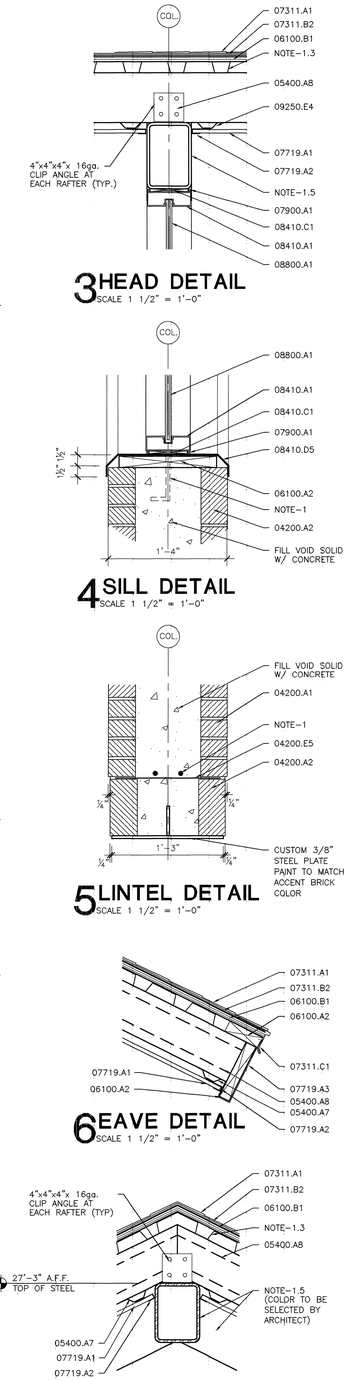

0 8" 1'-4" 2'-8"
SCALE: 3/4" = 1'-0"

MATERIAL KEYNOTES

04200.A1	4" VENEER FACE BRICK RE: ELEVATIONS AND DETAILS FOR LOCATIONS OF ACCENT COLORS OF BRICK
04200.A2	SOLDIER COURSE
04200.A4	4" FACE BRICK – ACCENT COLOR
04200.A5	4" FACE BRICK – FIELD COLOR
04200.E5	LADDER TYPE HORIZONTAL REINFORCING @ 16" o.c. VERTICAL TYPICAL
05400.A7	7/8" HAT CHANNELS @ 24" O. C. VER
05400.A8	6" METAL JOIST @ 12"o.c.
06100.A2	PRESSURE TREATED 2X WOOD BLOCKING
06100.B1	3/4" PLYWOOD SHEATHING
07311.A1	ASPHALT SHINGLES
07311.B2	2 LAYERS OF #15 ASPHALT SATURATED FELT
07311.C1	PREFINISHED METAL DRIP EDGE
07719.A1	PREFINISHED METAL SOFFIT PANEL
07719.A2	PREFINISH "J" CLOSURE TO MATCH PANEL
07719.A3	PREFINISHED METAL FASCIA MATCH FINISH OF SOFFIT PANEL
07900.A1	BACKER ROD AND SEALANT
08410.A1	ALUMINUM STOREFRONT FRAMING (EXTERIOR WINDOWS)
08410.C1	NEOPRENE SHIM
08410.D5	EXTRUDED ALUM. SILL FLASHING TO MATCH STORFRONT
08800.A1	1/4" TINTED AND HEAT TREATED FLOAT GLASS
09250.E4	7/8" METAL FURRING CHANNEL @ 16" O.C.
10430.A1	EXTERIOR METAL LETTERS RE: SPECIFICATIONS
10530.A1	WALKWAY COVER COLUMN (DRAINABLE)
10530.A2	WALKWAY COVER FASCIA
10530.A3	WALKWAY COVER BEAM
NOTE-1	RE: STRUCTURAL
NOTE-1.3	METAL ROOF DECK RE: STRUCTURAL
NOTE-1.5	STEEL BEAM RE: STRUCTURAL
NOTE-1.8	FOUNDATION RE: STRUCTURAL

KEY PLAN

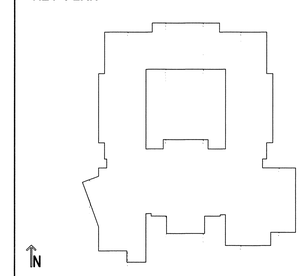

USE OF ARCHITECT'S DRAWINGS, SPECIFICATIONS AND OTHER DOCUMENTS

THE DRAWINGS, SPECIFICATIONS AND OTHER DOCUMENTS PREPARED BY THE ARCHITECT FOR THIS PROJECT ARE INSTRUMENTS OF THE ARCHITECT'S SERVICE FOR USE SOLELY WITH RESPECT TO THIS PROJECT AND, UNLESS OTHERWISE PROVIDED, THE ARCHITECT SHALL BE DEEMED THE AUTHOR OF THESE DOCUMENTS AND SHALL RETAIN ALL COMMON LAW, STATUTORY AND OTHER RESERVED RIGHTS, INCLUDING REPRODUCIBLE COPIES, OF THE ARCHITECT'S DRAWINGS, SPECIFICATIONS AND OTHER DOCUMENTS FOR INFORMATION AND REFERENCE IN CONNECTION WITH THE OWNER'S USE AND OCCUPANCY OF THE PROJECT. THE ARCHITECT'S DRAWINGS, SPECIFICATIONS OR OTHER DOCUMENTS SHALL NOT BE USED BY THE OWNER OR OTHERS ON OTHER PROJECTS, FOR ADDITIONS TO THIS PROJECT OR FOR COMPLETION OF THIS PROJECT BY OTHERS, UNLESS THE ARCHITECT IS ADJUDGED TO BE IN DEFAULT UNDER THIS AGREEMENT, EXCEPT BY AGREEMENT IN WRITING AND WITH APPROPRIATE COMPENSATION TO THE ARCHITECT.

NO.	DATE	REVISION/SUBMISSION
1	11/12/04	FIRE MARSHAL AND C.P. REVISIONS

McKINLEY MIDDLE MAGNET SCHOOL

1550 EDDIE ROBINSON SR. DRIVE
BATON ROUGE, LOUISIANA 70802

Robert M. Coleman & Partners Architects A.I.A.
3377 North Boulevard
Baton Rouge, Louisiana 70806 U.S.A.
tel 225.387.4414
fax 225.387.4693

BUILDING SECTION
WALL SECTION

PROJECT NO. 03048	SHEET NO.. A8.12
DRAWN BY CS	
CHECKED BY JS	
DATE October 15, 2004	OF

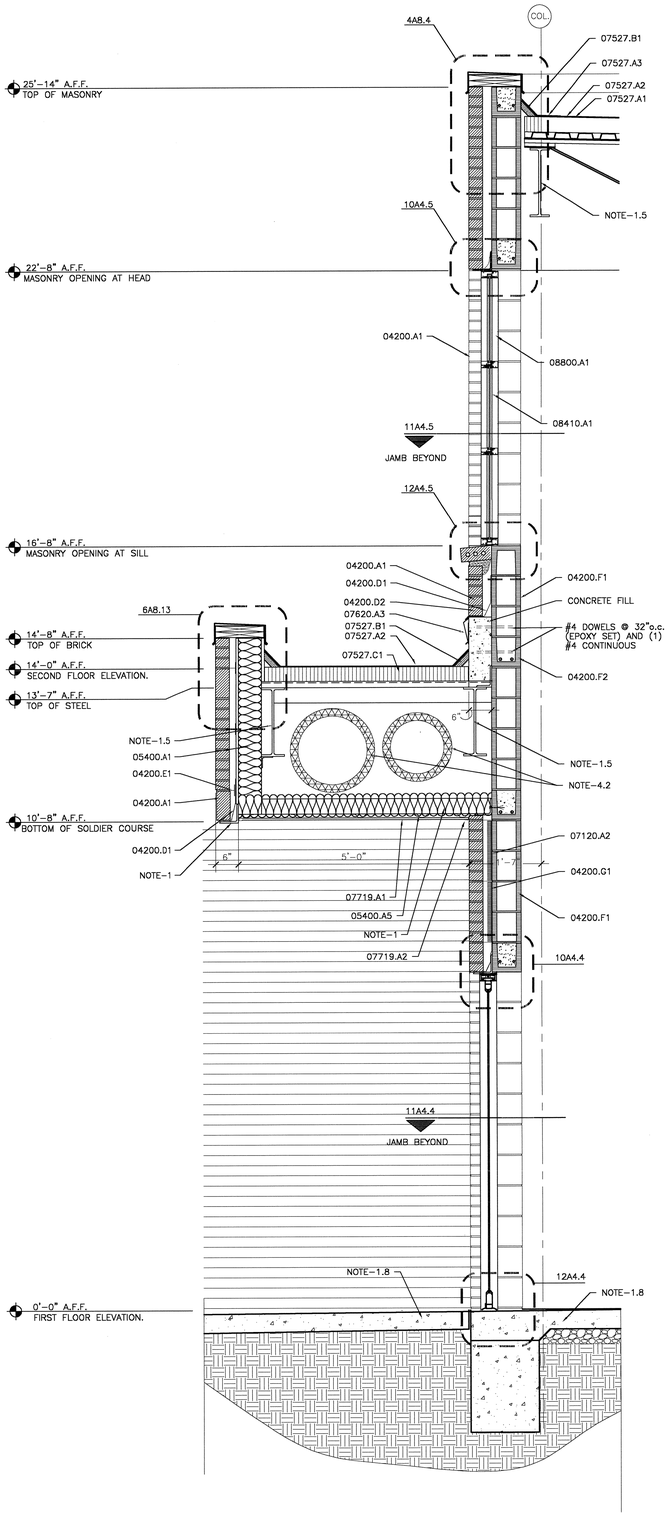

1 WALL SECTION
SCALE: 3/4" = 1'-0"

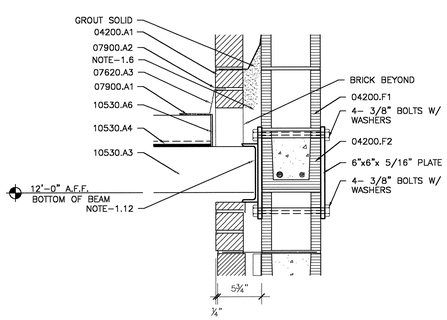

NOTE: CONTRACTOR TO LOCATE CANOPY ANCHORAGE POINTS ACCORDING TO CANOPY MANUFACTURE RECOMMENDATIONS

3 WALL DETAIL
SCALE: 1 1/2" = 1'-0"

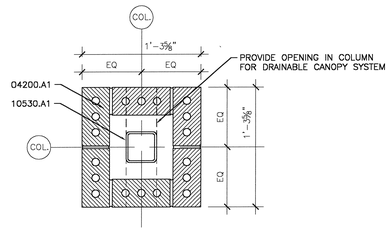

4 COLUMN DETAIL
SCALE: 1 1/2" = 1'-0"

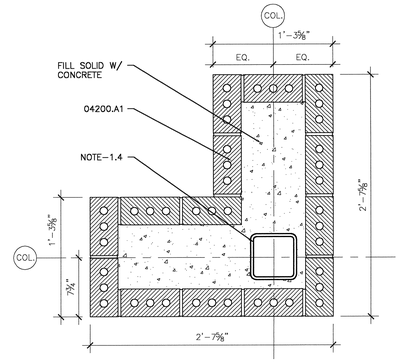

5 COLUMN DETAIL
SCALE: 1 1/2" = 1'-0"

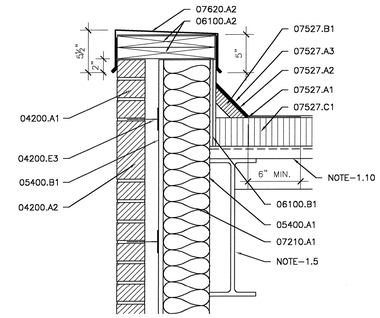

6 WALL DETAIL
SCALE: 1 1/2" = 1'-0"

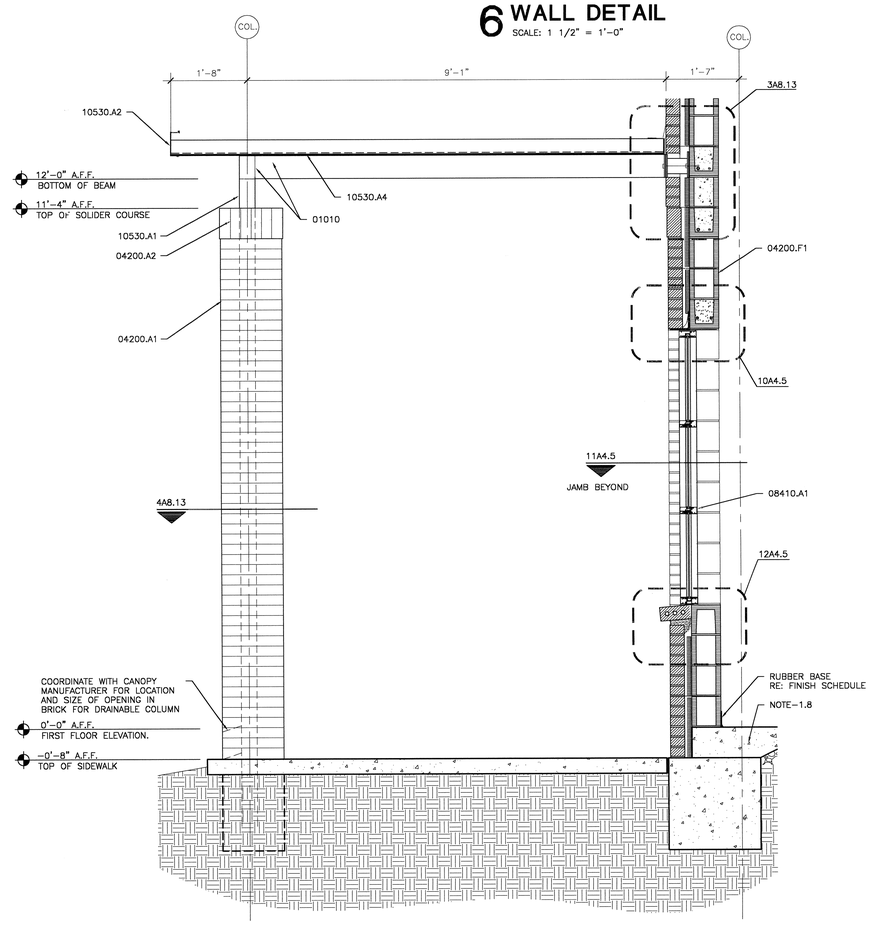

2 CANOPY SECTION
SCALE: 3/4" = 1'-0"

NOTE: CONTRACTOR FOLLOW CANOPY MANUFACTURES STANDARD FLASHING AND CONNECTION DETAILS.

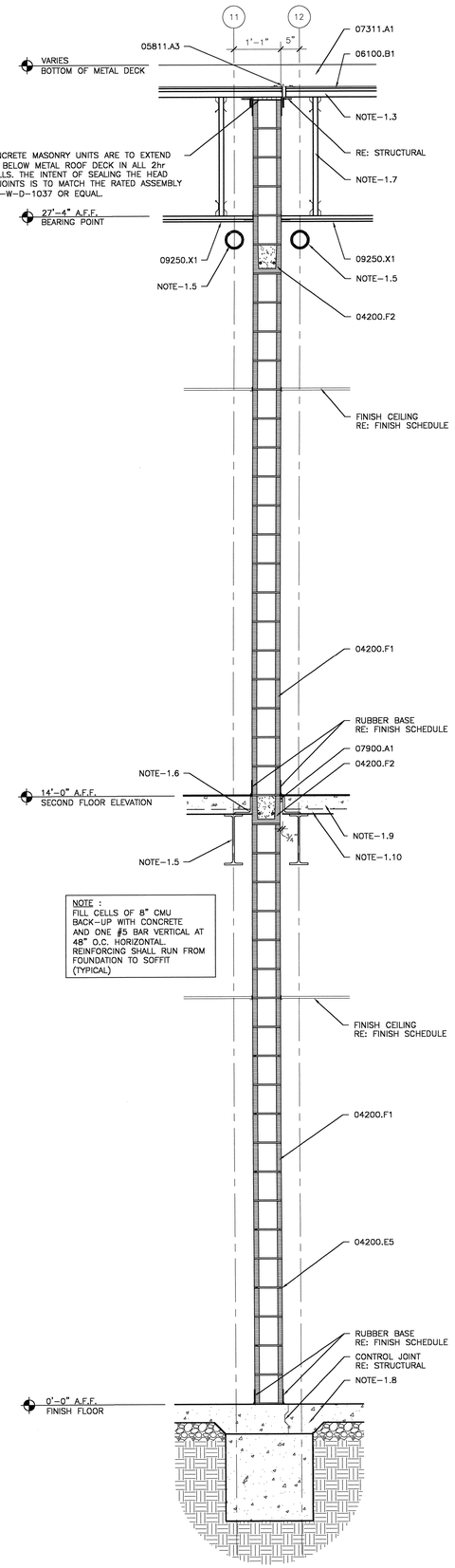

6 WALL SECTION
SCALE: 3/4" = 1'-0"

MATERIAL KEYNOTES

04200.A1	4" VENEER FACE BRICK RE: ELEVATIONS AND DETAILS FOR LOCATIONS OF ACCENT COLORS OF BRICK
04200.A2	SOLDIER COURSE
04200.D1	COPPER FABRIC THRU-WALL FLASHING
04200.D2	WEEP HOLES @ 24" O.C. – OPEN HEAD JOINT TYP.
04200.E1	ADJUSTABLE MASONRY VENEER WALL TIES (FOR PRECAST) @ 16" O.C. VERT. MAX 24" O.C. HORIZ. MAX. HECKMANN "POST-I-TIE" TAPON SCREW AND POST-I-TIE TRIANGLE WIRE TIE OR APPROVED EQUAL
04200.E3	ADJUSTABLE MASONRY VENEER WALL TIES @ 16" O.C. VERT. MAX. 24" O.C. HORIZ. MAX
04200.E5	LADDER TYPE HORIZONTAL REINFORCING @ 16" o.c. VERTICAL TYPICAL
04200.F1	8 X 8 X 16 CONCRETE MASONRY UNITS
04200.F2	CONCRETE MASONRY U-BLOCK CONCRETE FILLED WITH 2- #5 REBAR CONT.
04200.G1	CAVITY WALL INSULATION
05400.A1	6" METAL STUDS @ 16" O.C.
05400.A5	7/8" – 20 GA. FURRING CHANNEL
05400.B1	GYPSUM SHEATHING
05811.A3	EXPANSION JOINT COVER – ROOF
06100.A2	PRESSURE TREATED 2X WOOD BLOCKING
06100.B1	3/4" PLYWOOD SHEATHING
07120.A2	FLUID APPLIED WATERPROOFING OVER CMU
07210.A1	8" BATT. INSULATION
07311.A1	ASPHALT SHINGLES
07527.A1	SBS-MODIFIED BITUMEN ROOFING BASE LAYER
07527.A2	SBS-MODIFIED BITUMEN CAPSHEET
07527.A3	SBS-MODIFIED BITUMEN STRIP FLASHING IN ACCORDANCE TO MANUFACTURER STANDARDS
07527.B1	CANT STRIP
07527.C1	NSULATION BOARD – MULTI-LAYERED
07620.A2	PREFINISHED METAL COPING WITH CONTINUOUS HOLD DOWN CLEAT
07620.A3	MASONRY REGLET/ RECEIVER FLASHING AND METAL COUNTER FLASHING
07719.A1	PREFINISHED METAL SOFFIT PANEL
07719.A2	PREFINISH "J" CLOSURE TO MATCH PANEL
07900.A1	BACKER ROD AND SEALANT
07900.A2	SEALANT
08410.A1	ALUMINUM STOREFRONT FRAMING (EXTERIOR WINDOWS)
08800.A1	1/4" TINTED AND HEAT TREATED FLOAT GLASS
09250.X1	INSTALL 7/8" HAT CHANNELS @ 16 O.C. ON UNDERSIDE OF ALL PRE-ENGINEERED TRUSSES. INSTALL 5/8" GYPSUM BOARD ACROSS ENTIRE UNDERSIDE OF TRUSSES. TAPE AND FLOAT BEFORE ERECTING PARTITIONS TO UNDERSIDE OF GYPSUM BOARD.
10530.A1	WALKWAY COVER COLUMN (DRAINABLE)
10530.A2	WALKWAY COVER FASCIA
10530.A3	WALKWAY COVER BEAM
10530.A4	WALKWAY COVER DECK
10530.A6	WALKWAY COVER TRIM ANGLE
NOTE-1	RE: STRUCTURAL
NOTE-1.10	STEEL DECKING RE: STRUCTURAL
NOTE-1.12	STEEL CHANNEL RE: STRUCTURAL
NOTE-1.3	METAL ROOF DECK RE: STRUCTURAL
NOTE-1.4	STEEL COLUMN RE: STRUCTURAL
NOTE-1.5	STEEL BEAM RE: STRUCTURAL
NOTE-1.6	STEEL ANGLE RE: STRUCTURAL
NOTE-1.7	STEEL JOIST RE: STRUCTURAL
NOTE-1.8	FOUNDATION RE: STRUCTURAL
NOTE-1.9	CONCRETE SLAB RE: STRUCTURAL
NOTE-4.2	MECH DUCT RE: MECHANICAL

USE OF ARCHITECT"S DRAWINGS, SPECIFICATIONS AND OTHER DOCUMENTS

THE DRAWINGS, SPECIFICATIONS AND OTHER DOCUMENTS PREPARED BY THE ARCHITECT FOR THIS PROJECT ARE INSTRUMENTS OF THE ARCHITECT'S SERVICE FOR USE SOLELY WITH RESPECT TO THIS PROJECT AND, UNLESS OTHERWISE PROVIDED, THE ARCHITECT SHALL BE DEEMED THE AUTHOR OF THESE DOCUMENTS AND SHALL RETAIN ALL COMMON LAW, STATUTORY AND OTHER RESERVED RIGHTS, INCLUDING REPRODUCIBLE COPIES, OF THE ARCHITECT'S DRAWINGS, SPECIFICATIONS AND OTHER DOCUMENTS FOR INFORMATION AND REFERENCE IN CONNECTION WITH THE OWNER'S USE AND OCCUPANCY OF THE PROJECT. THE ARCHITECT'S DRAWINGS, SPECIFICATIONS OR OTHER DOCUMENTS SHALL NOT BE USED BY THE OWNER OR OTHERS ON OTHER PROJECTS, FOR ADDITIONS TO THIS PROJECT OR FOR COMPLETION OF THIS PROJECT BY OTHERS, UNLESS THE ARCHITECT IS ADJUDGED TO BE IN DEFAULT UNDER THIS AGREEMENT, EXCEPT BY AGREEMENT IN WRITING AND WITH APPROPRIATE COMPENSATION TO THE ARCHITECT.

NO.	DATE	REVISION/SUBMISSION
1	11/12/04	FIRE MARSHAL AND C.P. REVISIONS

McKINLEY MIDDLE MAGNET SCHOOL

1550 EDDIE ROBINSON SR. DRIVE
BATON ROUGE, LOUISIANA 70802

Robert M. Coleman & Partners Architects A.I.A.
3377 North Boulevard
Baton Rouge, Louisiana
70806
U.S.A.
tel 225.387.4414
fax 225.387.4693

WALL SECTIONS/DETAILS

ONE IN SUMMIT KEEP AN EYE STATE OF LOUISIANA REGISTERED ARCHITECT

PROJECT NO. 03048	SHEET NO.. A8.13
DRAWN BY CS, BH	
CHECKED BY JS	
DATE October 15, 2004	____ OF ____

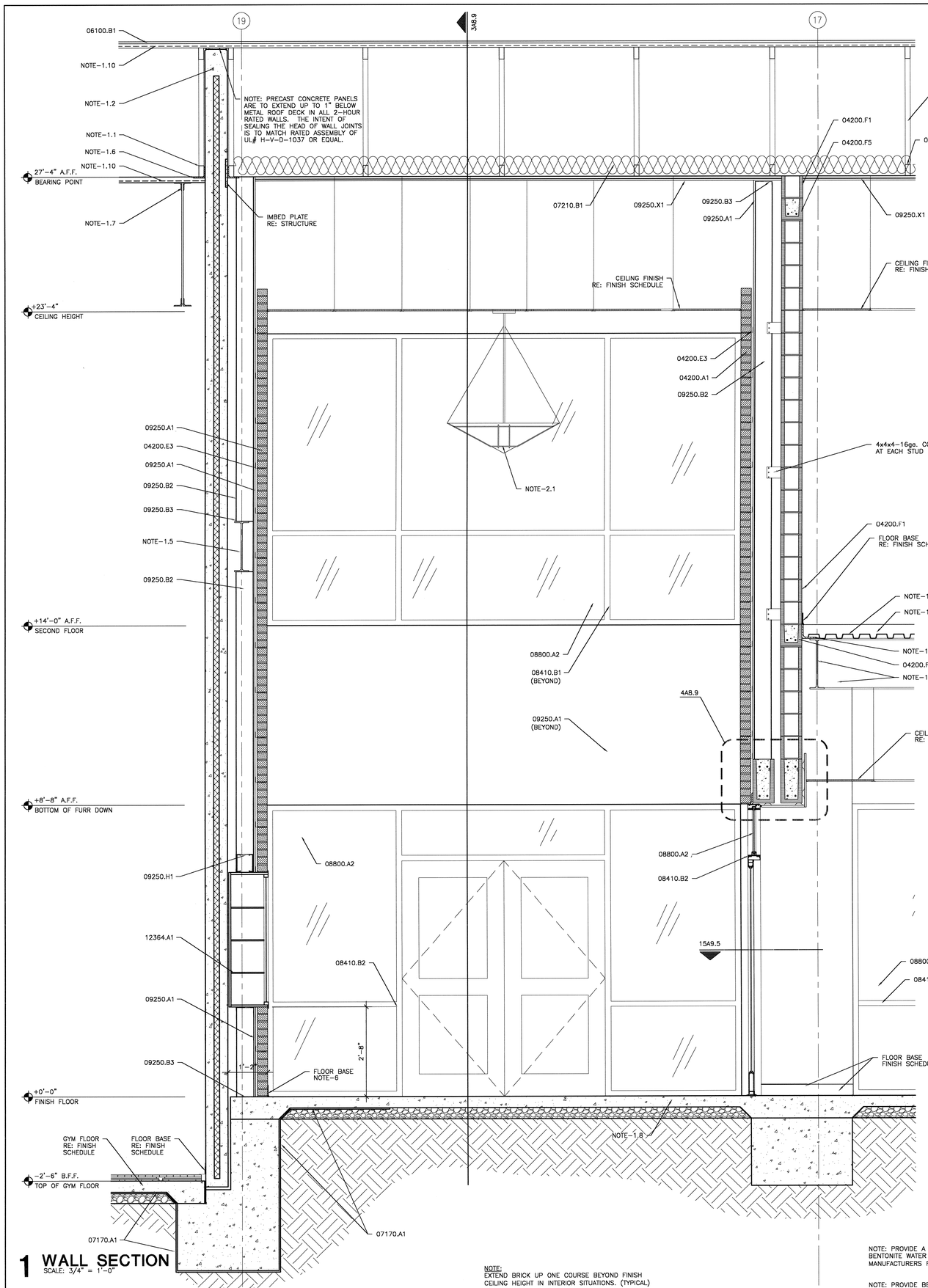

1 WALL SECTION
SCALE: 3/4" = 1'–0"

NOTE:
EXTEND BRICK UP ONE COURSE BEYOND FINISH CEILING HEIGHT IN INTERIOR SITUATIONS. (TYPICAL)

NOTE: PROVIDE A SUBSTRATE SUITABLE TO RECEIVE BENTONITE WATER PROOFING ACCORDING TO MANUFACTURERS RECOMMENDATIONS. (TYP.)

NOTE: PROVIDE BENTONITE WATER PROOFING UNDER AND AROUND ELEVATOR PIT.

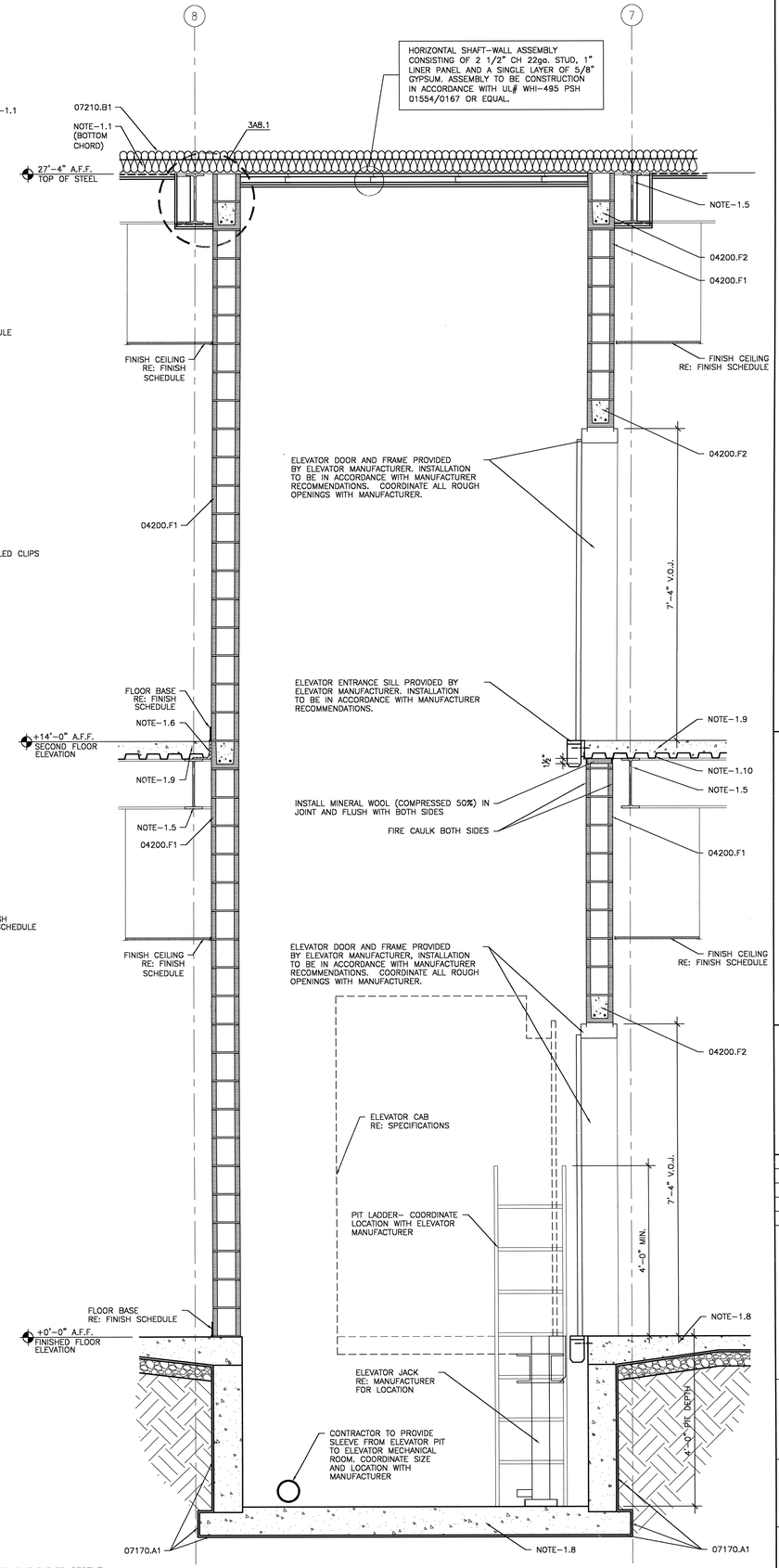

2 ELEVATOR SECTION
SCALE: 3/4" = 1'–0"

MATERIAL KEYNOTES

04200.A1	4" VENEER FACE BRICK RE: ELEVATIONS AND DETAILS FOR LOCATIONS OF ACCENT COLORS OF BRICK
04200.E3	ADJUSTABLE MASONRY VENEER WALL TIES @ 16" O.C. VERT. MAX. 24" O.C. HORIZ. MAX
04200.F1	8 X 8 X 16 CONCRETE MASONRY UNITS
04200.F2	CONCRETE MASONRY U–BLOCK CONCRETE FILLED WITH 2– #5 REBAR CONT.
04200.F5	CONCRETE MASONRY U–BLOCK BOND BEAM CONCRETE FILLED WITH 2– #5 REBAR
06100.B1	3/4" PLYWOOD SHEATHING
07170.A1	BENTONITE WATERPROOFING
07210.B1	LOOSE FILL INSULATION R–30 MINIMUM
08410.B1	ALUMINUM STOREFRONT FRAMING (INTERIOR)
08410.B2	ALUMINUM STOREFRONT ENTRANCE DOORS & FRAME (INTERIOR)
08800.A2	1/4" TEMPERED GLASS – INTERIOR GLAZING
09250.A1	5/8" GYPSUM BOARD
09250.B2	6" METAL STUDS
09250.B3	METAL STUD TRACK
09250.H1	NESTED DBL 6" METAL STUD BOX BEAM
09250.X1	INSTALL 7/8" HAT CHANNELS @ 16 O.C. ON UNDERSIDE OF ALL PRE–ENGINEERED TRUSSES. INSTALL 5/8" GYPSUM BOARD ACROSS ENTIRE UNDERSIDE OF TRUSSES. TAPE AND FLOAT BEFORE ERECTING PARTITIONS TO UNDERSIDE OF GYPSUM BOARD.
12364.A1	4'–0" X 8'–0" RECESSED TROPHY CASEWORK
NOTE–1.1	PRE–ENGINEERED ROOF TRUSS RE: STRUCTURAL
NOTE–1.10	STEEL DECKING RE: STRUCTURAL
NOTE–1.2	PRECAST CONCRETE PANEL RE: STRUCTURAL
NOTE–1.5	STEEL BEAM RE: STRUCTURAL
NOTE–1.6	STEEL ANGLE RE: STRUCTURAL
NOTE–1.7	STEEL JOIST RE: STRUCTURAL
NOTE–1.8	FOUNDATION RE: STRUCTURAL
NOTE–1.9	CONCRETE SLAB RE: STRUCTURAL
NOTE–2.1	LIGHT FIXTURE RE: ELECTRICAL
NOTE–6	RE: FINISH SCHEDULE

KEY PLAN

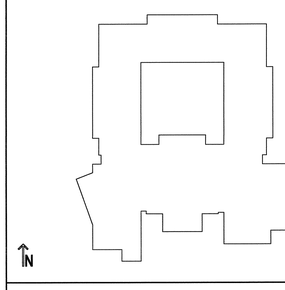

USE OF ARCHITECT'S DRAWINGS, SPECIFICATIONS AND OTHER DOCUMENTS

THE DRAWINGS, SPECIFICATIONS AND OTHER DOCUMENTS PREPARED BY THE ARCHITECT FOR THIS PROJECT ARE INSTRUMENTS OF THE ARCHITECT'S SERVICE FOR USE SOLELY WITH RESPECT TO THIS PROJECT AND, UNLESS OTHERWISE PROVIDED, THE ARCHITECT SHALL BE DEEMED THE AUTHOR OF THESE DOCUMENTS AND SHALL RETAIN ALL COMMON LAW, STATUTORY AND OTHER RESERVED RIGHTS, INCLUDING REPRODUCIBLE COPIES, OF THE ARCHITECT'S DRAWINGS, SPECIFICATIONS AND OTHER DOCUMENTS FOR INFORMATION AND REFERENCE IN CONNECTION WITH THE OWNER'S USE AND OCCUPANCY OF THE PROJECT. THE ARCHITECT'S DRAWINGS, SPECIFICATIONS OR OTHER DOCUMENTS SHALL NOT BE USED BY THE OWNER OR OTHERS ON OTHER PROJECTS, FOR ADDITIONS TO THIS PROJECT OR FOR COMPLETION OF THIS PROJECT BY OTHERS, UNLESS THE ARCHITECT IS ADJUDGED TO BE IN DEFAULT UNDER THIS AGREEMENT, EXCEPT BY AGREEMENT IN WRITING AND WITH APPROPRIATE COMPENSATION TO THE ARCHITECT.

NO.	DATE	REVISION/SUBMISSION
1	11/12/04	FIRE MARSHAL AND C.P. REVISIONS

McKINLEY MIDDLE MAGNET SCHOOL

1550 EDDIE ROBINSON SR. DRIVE
BATON ROUGE, LOUISIANA 70802

Robert M. Coleman & Partners Architects A.I.A.
3377 North Boulevard
Baton Rouge, Louisiana 70806
U.S.A.
tel 225.387.4414
fax 225.387.4693

WALL SECTION

PROJECT NO. 0304B	SHEET NO.. A8.14
DRAWN BY JM, CS	
CHECKED BY JS	
DATE October 15, 2004	OF

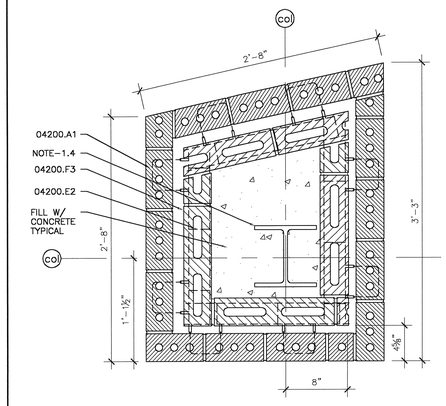

1 COLUMN DETAIL
SCALE: 1 1/2" = 1'-0"

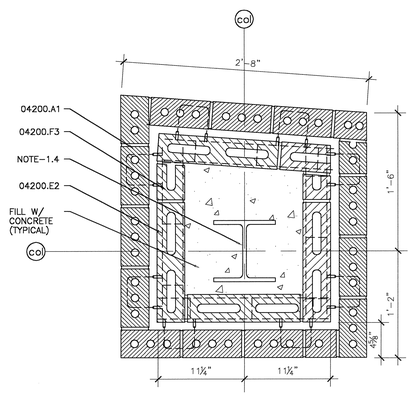

2 COLUMN DETAIL
SCALE: 1 1/2" = 1'-0"

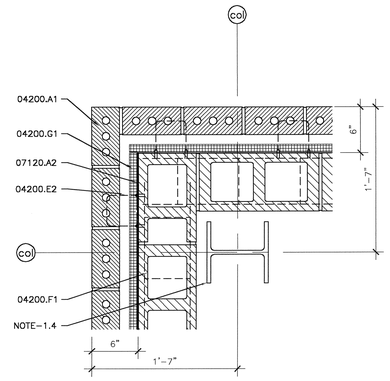

3 COLUMN DETAIL
SCALE: 1 1/2" = 1'-0"

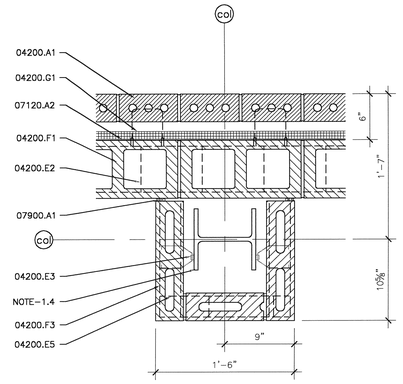

4 COLUMN DETAIL
SCALE: 1 1/2" = 1'-0"

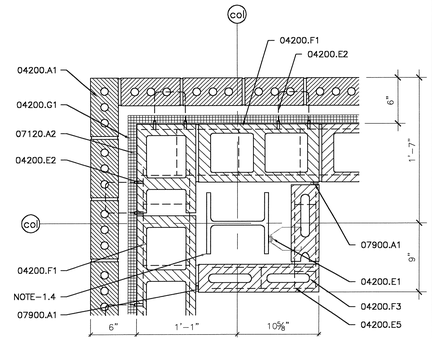

5 COLUMN DETAIL
SCALE: 1 1/2" = 1'-0"

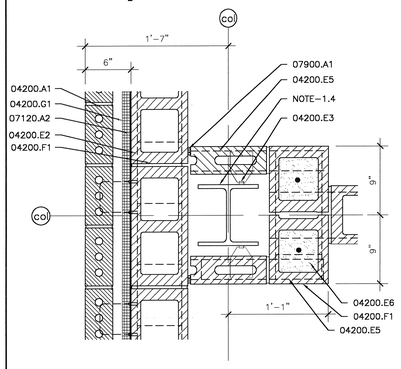

6 COLUMN DETAIL
SCALE: 1 1/2" = 1'-0"

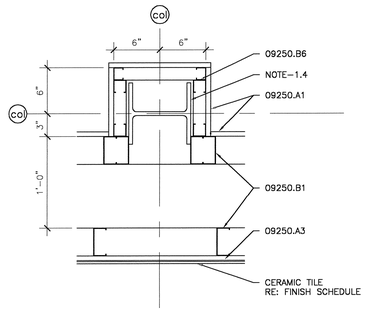

7 COLUMN DETAIL
SCALE: 1 1/2" = 1'-0"

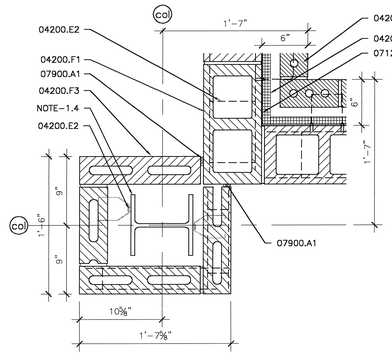

8 COLUMN DETAIL
SCALE: 1 1/2" = 1'-0"

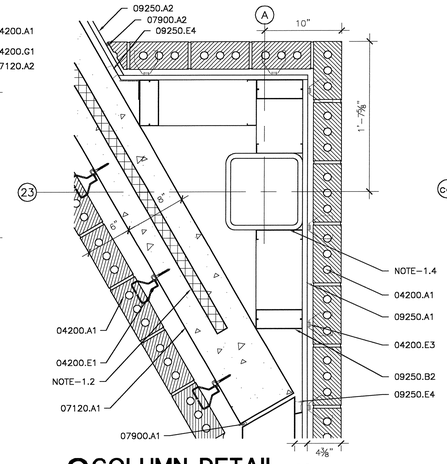

9 COLUMN DETAIL
SCALE: 1 1/2" = 1'-0"

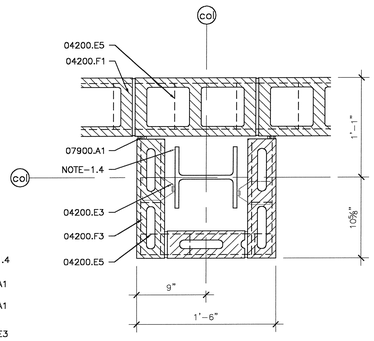

10 COLUMN DETAIL
SCALE: 1 1/2" = 1'-0"

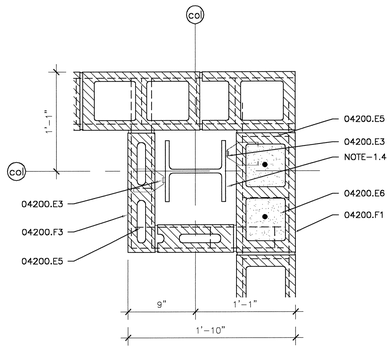

11 COLUMN DETAIL
SCALE: 1 1/2" = 1'-0"

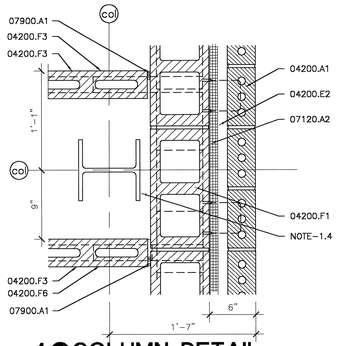

12 COLUMN DETAIL
SCALE: 1 1/2" = 1'-0"

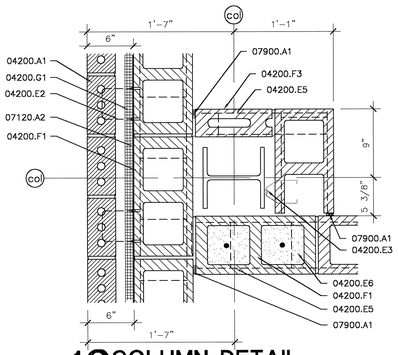

13 COLUMN DETAIL
SCALE: 1 1/2" = 1'-0"

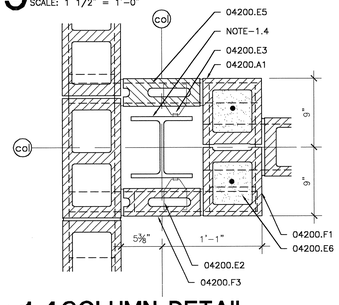

14 COLUMN DETAIL
SCALE: 1 1/2" = 1'-0"

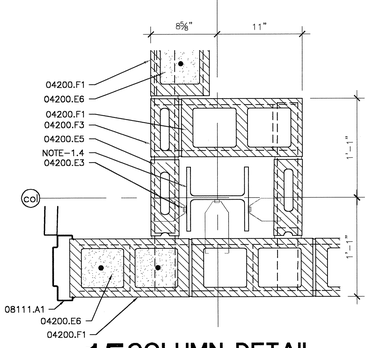

15 COLUMN DETAIL
SCALE: 1 1/2" = 1'-0"

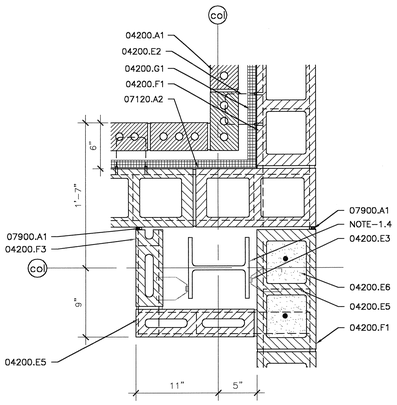

16 COLUMN DETAIL
SCALE: 1 1/2" = 1'-0"

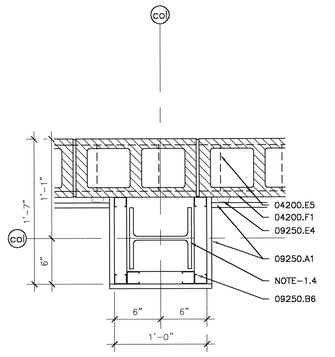

17 COLUMN DETAIL
SCALE: 1 1/2" = 1'-0"

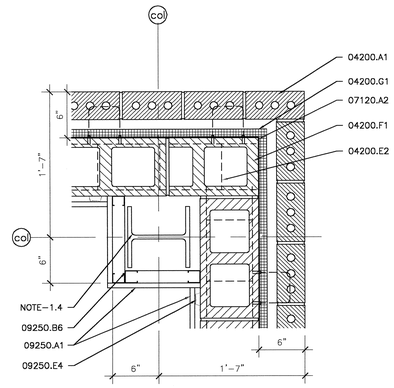

18 COLUMN DETAIL
SCALE: 1 1/2" = 1'-0"

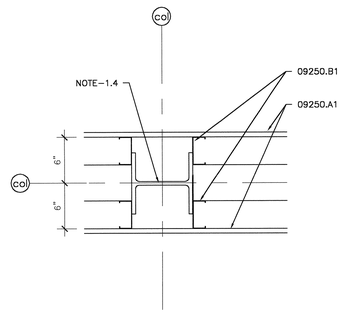

19 COLUMN DETAIL
SCALE: 1 1/2" = 1'-0"

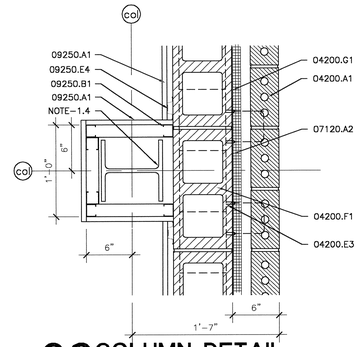

20 COLUMN DETAIL
SCALE: 1 1/2" = 1'-0"

MATERIAL KEYNOTES

04200.A1	4" VENEER FACE BRICK RE: ELEVATIONS AND DETAILS FOR LOCATIONS OF ACCENT COLORS OF BRICK
04200.E1	ADJUSTABLE MASONRY VENEER WALL TIES (FOR PRECAST) @ 16" O.C. VERT. MAX 24" O.C. HORIZ. MAX. HECKMANN "POST-I-TIE" TAPON SCREW AND POST-I-TIE TRIANGLE WIRE TIE OR APPROVED EQUAL
04200.E2	TWO PIECE LADDER TYPE HORIZONTAL REINFORCING WITH ADJUSTABLE EYE AND WIRE TIE
04200.E3	ADJUSTABLE MASONRY VENEER WALL TIES @ 16" O.C. VERT. MAX. 24" O.C. HORIZ. MAX
04200.E5	LADDER TYPE HORIZONTAL REINFORCING @ 16" o.c. VERTICAL TYPICAL
04200.E6	FILL CORE W/ CONCRETE AND #5 VERTICAL
04200.F1	8 X 8 X 16 CONCRETE MASONRY UNITS
04200.F3	4" X 8" X 16" CONCRETE MASONRY BLOCK
04200.F6	6 X 8 X 16 CONCRETE MASONRY BLOCK
04200.G1	CAVITY WALL INSULATION
07120.A1	FLUID APPLIED WATERPROOFING OEVER PRECAST PANEL. SEAL ALL PANEL JOINTS WITH BACKER ROD AND SEALANT
07120.A2	FLUID APPLIED WATERPROOFING OVER CMU
07900.A1	BACKER ROD AND SEALANT
07900.A2	SEALANT
08111.A1	HOLLOW METAL FRAME
09250.A1	5/8" GYPSUM BOARD
09250.A2	5/8" IMPACT RESISTANT GYPSUM BOARD
09250.A3	5/8" CEMENTITIOUS BOARD
09250.B1	3-5/8" METAL STUDS
09250.B2	6" METAL STUDS
09250.B6	1-5/8" METAL STUDS @ 16" O.C.
09250.E1	1-1/2" METAL FURRING CHANNEL @ 16" O.C.
09250.E4	7/8" METAL FURRING CHANNEL @ 16" O.C.
NOTE-1.2	PRECAST CONCRETE PANEL RE: STRUCTURAL
NOTE-1.4	STEEL COLUMN RE: STRUCTURAL

NOTE:

1. FOR BRICK REVEALS REFER. TO EXTERIOR ELEVATION SHEETS FOR LOCATION AND DETAILS.
2. THE LOCATION OF ALL CUT BLOCK WILL TAKE PLACE AT THE CORNERS OF EXTERIOR WALLS AND NOT AT THE WINDOW AND DOOR LOCATIONS.
3. EXTEND THE 4" LADDER TYPE REINFORCING 16" INTO THE 8" BLOCK THAT IT TIES INTO.

KEY PLAN

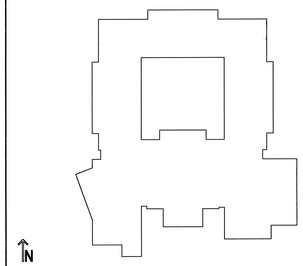

USE OF ARCHITECT'S DRAWINGS, SPECIFICATIONS AND OTHER DOCUMENTS

THE DRAWINGS, SPECIFICATIONS AND OTHER DOCUMENTS PREPARED BY THE ARCHITECT FOR THIS PROJECT ARE INSTRUMENTS OF THE ARCHITECT'S SERVICE FOR USE SOLELY WITH RESPECT TO THIS PROJECT AND, UNLESS OTHERWISE PROVIDED, THE ARCHITECT SHALL BE DEEMED THE AUTHOR OF THESE DOCUMENTS AND SHALL RETAIN ALL COMMON LAW, STATUTORY AND OTHER RESERVED RIGHTS, INCLUDING REPRODUCIBLE COPIES, OF THE ARCHITECT'S DRAWINGS, SPECIFICATIONS AND OTHER DOCUMENTS FOR INFORMATION AND REFERENCE IN CONNECTION WITH THE OWNER'S USE AND OCCUPANCY OF THE PROJECT. THE ARCHITECT'S DRAWINGS, SPECIFICATIONS OR OTHER DOCUMENTS SHALL NOT BE USED BY THE OWNER OR OTHERS ON OTHER PROJECTS, FOR ADDITIONS TO THIS PROJECT OR FOR COMPLETION OF THIS PROJECT BY OTHERS, UNLESS THE ARCHITECT IS ADJUDGED TO BE IN DEFAULT UNDER THIS AGREEMENT, EXCEPT BY AGREEMENT IN WRITING AND WITH APPROPRIATE COMPENSATION TO THE ARCHITECT.

NO.	DATE	REVISION/SUBMISSION
1	11/12/04	FIRE MARSHAL AND C.P. REVISIONS

McKINLEY MIDDLE MAGNET SCHOOL

1550 EDDIE ROBINSON SR. DRIVE
BATON ROUGE, LOUISIANA 70802

Robert M. Coleman & Partners Architects A.I.A.
3377 North Boulevard
Baton Rouge, Louisiana 70806 U.S.A.
tel 225.387.4414
fax 225.387.4693

COLUMN DETAILS

PROJECT NO.	0304B
DRAWN BY	CS
CHECKED BY	JS
DATE	October 15, 2004
SHEET NO..	A9.1
	OF

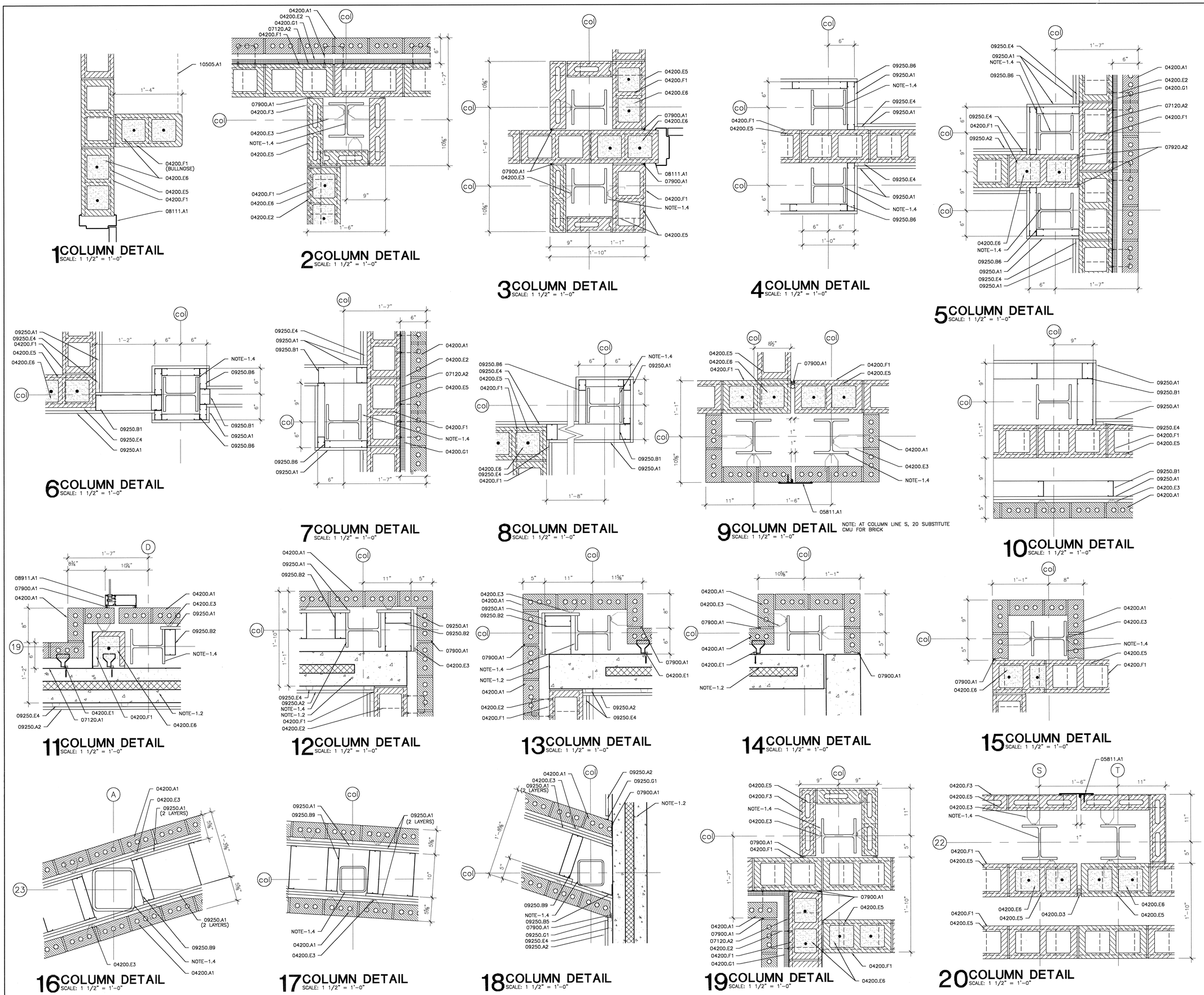

MATERIAL KEYNOTES

04200.A1	4" VENEER FACE BRICK RE: ELEVATIONS AND DETAILS FOR LOCATIONS OF ACCENT COLORS OF BRICK
04200.D3	MASONRY CONTROL JOINT
04200.E1	ADJUSTABLE MASONRY VENEER WALL TIES (FOR PRECAST) @ 16" O.C. VERT. MAX 24" O.C. HORIZ. MAX. HECKMANN "POST-I-TIE" TAPON SCREW AND POST-I-TIE TRIANGLE WIRE TIE OR APPROVED EQUAL
04200.E2	TWO PIECE LADDER TYPE HORIZONTAL REINFORCING WITH ADJUSTABLE EYE AND WIRE TIE
04200.E3	ADJUSTABLE MASONRY VENEER WALL TIES @ 16" O.C. VERT. MAX. 24" O.C. HORIZ. MAX
04200.E5	LADDER TYPE HORIZONTAL REINFORCING @ 16" o.c. VERTICAL TYPICAL
04200.E6	FILL CORE W/ CONCRETE AND #5 VERTICAL
04200.F1	8 X 8 X 16 CONCRETE MASONRY UNITS
04200.F3	4" X 8" X 16" CONCRETE MASONRY BLOCK
04200.G1	CAVITY WALL INSULATION
05811.A1	EXPASION JOINT COVER - WALL
07120.A1	FLUID APPLIED WATERPROOFING OEVER PRECAST PANEL, SEAL ALL PANEL JOINTS WITH BACKER ROD AND SEALANT
07120.A2	FLUID APPLIED WATERPROOFING OVER CMU
07900.A1	BACKER ROD AND SEALANT
07920.A2	FIRE CAULK
08111.A1	HOLLOW METAL FRAME
08911.A1	ALUMINUM CURTAIN WALLS
09250.A1	5/8" GYPSUM BOARD
09250.A2	5/8" IMPACT RESISTANT GYPSUM BOARD
09250.B1	3-5/8" METAL STUDS
09250.B2	6" METAL STUDS
09250.B5	2-1/2" x 2-1/2" COLD ROLLED ANGLE (20 GA.)
09250.B6	1-5/8" METAL STUDS @ 16" O.C.
09250.B9	10" METAL STUDS @ 16"o.c.
09250.E4	7/8" METAL FURRING CHANNEL @ 16" O.C.
09250.G1	EXTRUDED ALUMINUM DRYWALL REVEAL 3/4" - TYPE F" REVEAL
10505.A1	CORRIDOR LOCKER - TYPE I DBL. TIER (12"X15"X36") WITH SLOPED TOP
NOTE-1.2	PRECAST CONCRETE PANEL RE: STRUCTURAL
NOTE-1.4	STEEL COLUMN RE: STRUCTURAL

NOTE:

1. FOR BRICK REVEALS REFER. TO EXTERIOR ELEVATION SHEETS FOR LOCATION AND DETAILS.
2. THE LOCATION OF ALL CUT BLOCK WILL TAKE PLACE AT THE CORNERS OF EXTERIOR WALLS AND NOT AT THE WINDOW AND DOOR LOCATIONS.
3. EXTEND THE 4" LADDER TYPE REINFORCING 16" INTO THE 8" BLOCK THAT IT TIES INTO.

KEY PLAN

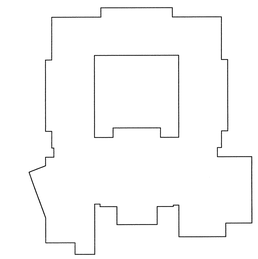

USE OF ARCHITECT'S DRAWINGS, SPECIFICATIONS AND OTHER DOCUMENTS

THE DRAWINGS, SPECIFICATIONS AND OTHER DOCUMENTS PREPARED BY THE ARCHITECT FOR THIS PROJECT ARE INSTRUMENTS OF THE ARCHITECT'S SERVICE FOR USE SOLELY WITH RESPECT TO THIS PROJECT AND, UNLESS OTHERWISE PROVIDED, THE ARCHITECT SHALL BE DEEMED THE AUTHOR OF THESE DOCUMENTS AND SHALL RETAIN ALL COMMON LAW, STATUTORY AND OTHER RESERVED RIGHTS, INCLUDING REPRODUCIBLE COPIES, OF THE ARCHITECT'S DRAWINGS, SPECIFICATIONS AND OTHER DOCUMENTS FOR INFORMATION AND REFERENCE IN CONNECTION WITH THE OWNER'S USE AND OCCUPANCY OF THE PROJECT. THE ARCHITECT'S DRAWINGS, SPECIFICATIONS OR OTHER DOCUMENTS SHALL NOT BE USED BY THE OWNER OR OTHERS ON OTHER PROJECTS, FOR ADDITIONS TO THIS PROJECT OR FOR COMPLETION OF THIS PROJECT BY OTHERS, UNLESS THE ARCHITECT IS ADJUDGED TO BE IN DEFAULT UNDER THIS AGREEMENT, EXCEPT BY AGREEMENT IN WRITING AND WITH APPROPRIATE COMPENSATION TO THE ARCHITECT.

NO.	DATE	REVISION/SUBMISSION
1	11/12/04	FIRE MARSHAL AND C.P. REVISIONS

McKINLEY MIDDLE MAGNET SCHOOL

1550 EDDIE ROBINSON SR. DRIVE
BATON ROUGE, LOUISIANA 70802

Robert M. Coleman & Partners Architects A.I.A.
3377 North Boulevard
Baton Rouge, Louisiana 70806
U.S.A.
tel 225.387.4414
fax 225.387.4693

COLUMN DETAILS

PROJECT NO. 03048	SHEET NO.. A9.2
DRAWN BY CS	
CHECKED BY JS	
DATE October 15, 2004	OF

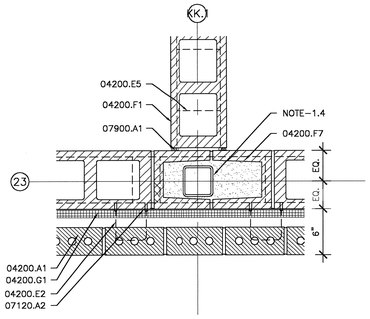

1 COLUMN DETAIL
SCALE: 1 1/2" = 1'-0"

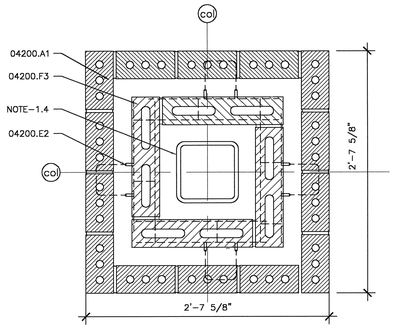

2 COLUMN DETAIL
SCALE: 1 1/2" = 1'-0"

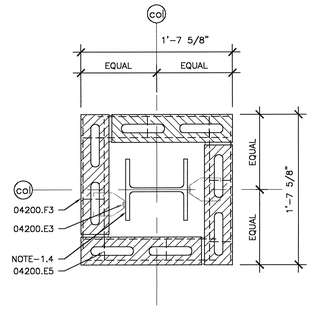

3 COLUMN DETAIL
SCALE: 1 1/2" = 1'-0"

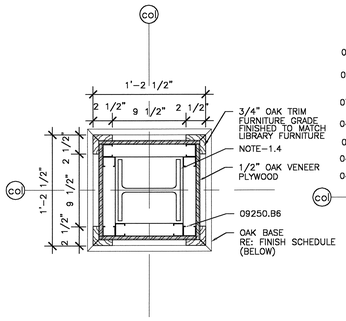

4 COLUMN DETAIL
SCALE: 1 1/2" = 1'-0"

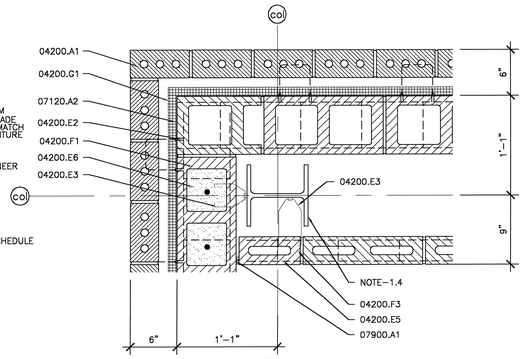

5 COLUMN DETAIL
SCALE: 1 1/2" = 1'-0"

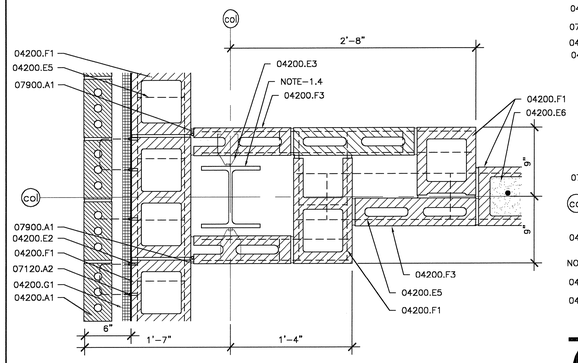

6 COLUMN DETAIL
SCALE: 1 1/2" = 1'-0"

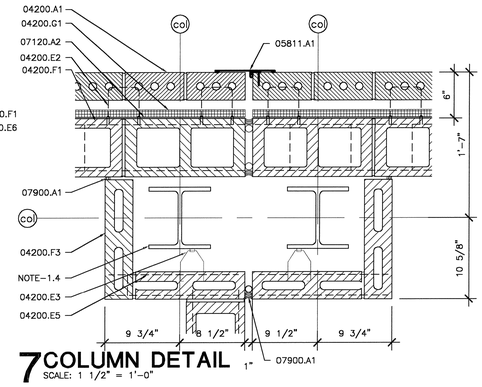

7 COLUMN DETAIL
SCALE: 1 1/2" = 1'-0"

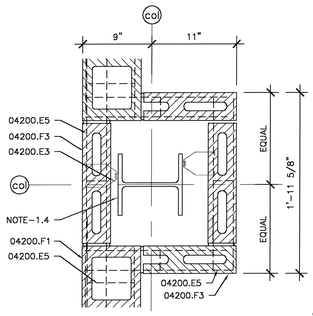

8 COLUMN DETAIL
SCALE: 1 1/2" = 1'-0"

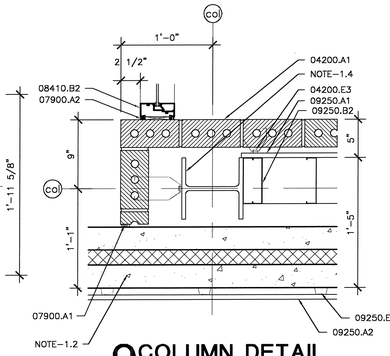

9 COLUMN DETAIL
SCALE: 1 1/2" = 1'-0"

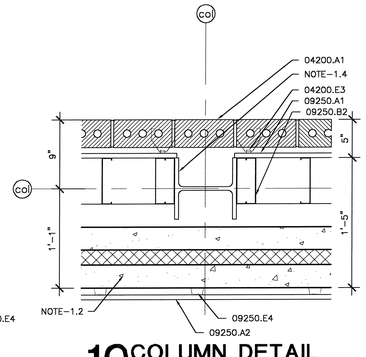

10 COLUMN DETAIL
SCALE: 1 1/2" = 1'-0"

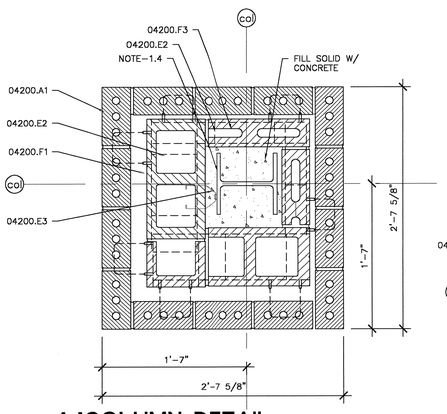

11 COLUMN DETAIL
SCALE: 1 1/2" = 1'-0"

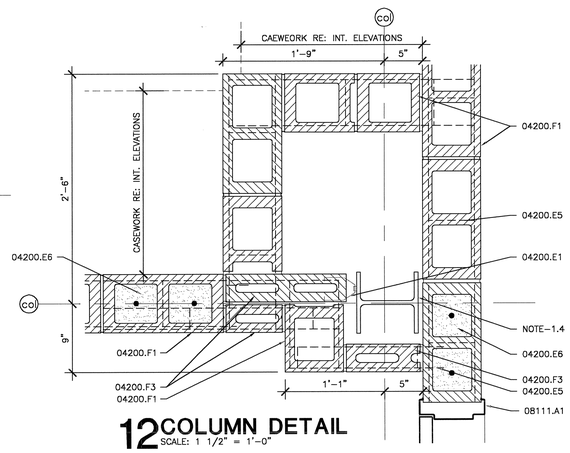

12 COLUMN DETAIL
SCALE: 1 1/2" = 1'-0"

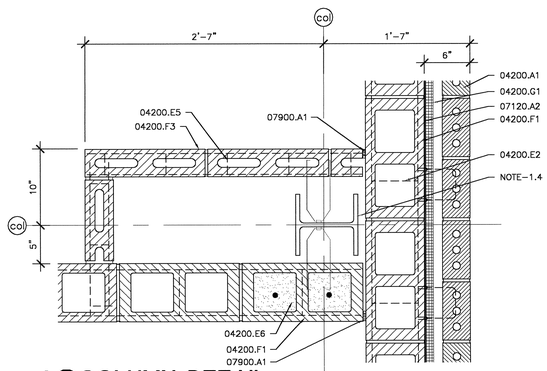

13 COLUMN DETAIL
SCALE: 1 1/2" = 1'-0"

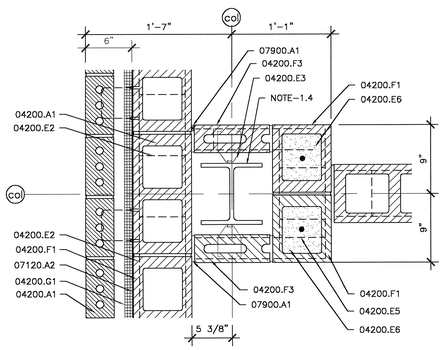

14 COLUMN DETAIL
SCALE: 1 1/2" = 1'-0"

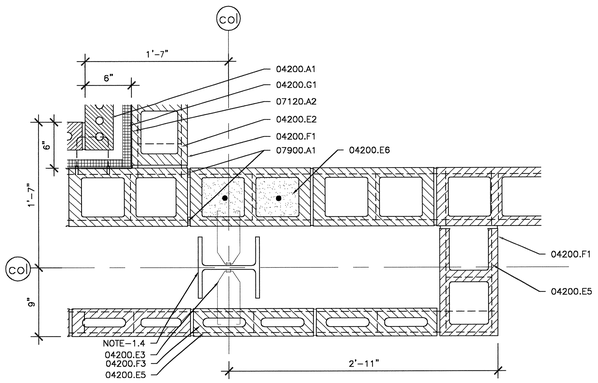

15 COLUMN DETAIL
SCALE: 1 1/2" = 1'-0"

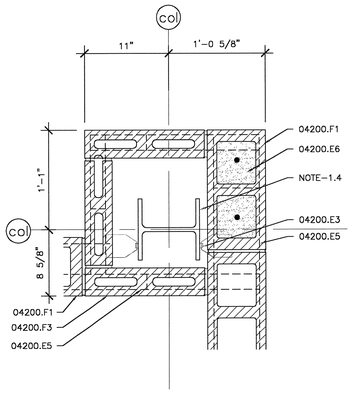

16 COLUMN DETAIL
SCALE: 1 1/2" = 1'-0"

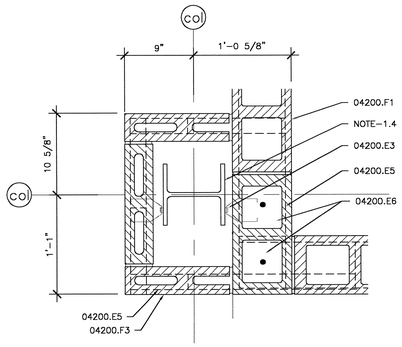

17 COLUMN DETAIL
SCALE: 1 1/2" = 1'-0"

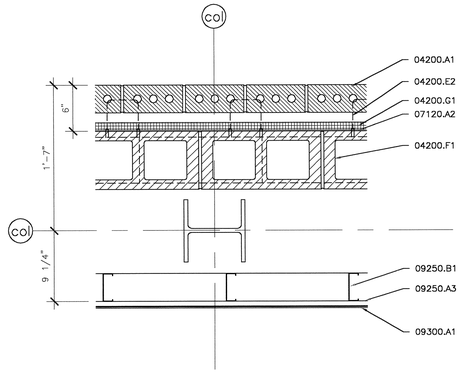

18 COLUMN DETAIL
SCALE: 1 1/2" = 1'-0"

MATERIAL KEYNOTES

04200.A1	4" VENEER FACE BRICK RE: ELEVATIONS AND DETAILS FOR LOCATIONS OF ACCENT COLORS OF BRICK
04200.E1	ADJUSTABLE MASONRY VENEER WALL TIES (FOR PRECAST) @ 16" O.C. VERT. MAX 24" O.C. HORIZ. MAX. HECKMANN "POST-I-TIE" TAPON SCREW AND POST-I-TIE TRIANGLE WIRE TIE OR APPROVED EQUAL
04200.E2	TWO PIECE LADDER TYPE HORIZONTAL REINFORCING WITH ADJUSTABLE EYE AND WIRE TIE
04200.E3	ADJUSTABLE MASONRY VENEER WALL TIES @ 16" O.C. VERT. MAX. 24" O.C. HORIZ. MAX
04200.E5	LADDER TYPE HORIZONTAL REINFORCING @ 16" o.c. VERTICAL TYPICAL
04200.E6	FILL CORE W/ CONCRETE AND #5 VERTICAL
04200.F1	8 X 8 X 16 CONCRETE MASONRY UNITS
04200.F3	4" X 8" X 16" CONCRETE MASONRY BLOCK
04200.F7	CONCRETE MASONRY U-BLOCK CONCRETE FILLED
04200.G1	CAVITY WALL INSULATION
05811.A1	EXPANSION JOINT COVER - WALL
07120.A2	FLUID APPLIED WATERPROOFING OVER CMU
07900.A1	BACKER ROD AND SEALANT
07900.A2	SEALANT
08111.A1	HOLLOW METAL FRAME
08410.B2	ALUMINUM STOREFRONT ENTRANCE DOORS & FRAME (INTERIOR)
09250.A1	5/8" GYPSUM BOARD
09250.A2	5/8" IMPACT RESISTANT GYPSUM BOARD
09250.A3	5/8" CEMENTITIOUS BOARD
09250.B1	3-5/8" METAL STUDS
09250.B2	6" METAL STUDS
09250.B6	1-5/8" METAL STUDS @ 16" O.C.
09250.E4	7/8" METAL FURRING CHANNEL @ 16" O.C.
09300.A1	CERAMIC WALL TILE
NOTE-1.2	PRECAST CONCRETE PANEL RE: STRUCTURAL
NOTE-1.4	STEEL COLUMN RE: STRUCTURAL

NOTE:

1. FOR BRICK REVEALS REFER. TO EXTERIOR ELEVATION SHEETS FOR LOCATION AND DETAILS.
2. THE LOCATION OF ALL CUT BLOCK WILL TAKE PLACE AT THE CORNERS OF EXTERIOR WALLS AND NOT AT THE WINDOW AND DOOR LOCATIONS.
3. EXTEND THE 4" LADDER TYPE REINFORCING 16" INTO THE 8" BLOCK THAT IT TIES INTO.

KEY PLAN

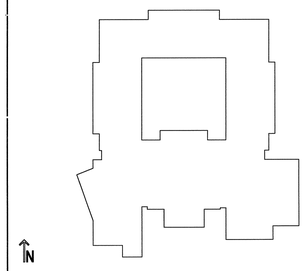

USE OF ARCHITECT'S DRAWINGS, SPECIFICATIONS AND OTHER DOCUMENTS

THE DRAWINGS, SPECIFICATIONS AND OTHER DOCUMENTS PREPARED BY THE ARCHITECT FOR THIS PROJECT ARE INSTRUMENTS OF THE ARCHITECT'S SERVICE FOR USE SOLELY WITH RESPECT TO THIS PROJECT AND, UNLESS OTHERWISE PROVIDED, THE ARCHITECT SHALL BE DEEMED THE AUTHOR OF THESE DOCUMENTS AND SHALL RETAIN ALL COMMON LAW, STATUTORY AND OTHER RESERVED RIGHTS, INCLUDING REPRODUCIBLE COPIES, OF THE ARCHITECT'S DRAWINGS, SPECIFICATIONS AND OTHER DOCUMENTS FOR INFORMATION AND REFERENCE IN CONNECTION WITH THE OWNER'S USE AND OCCUPANCY OF THE PROJECT. THE ARCHITECT'S DRAWINGS, SPECIFICATIONS OR OTHER DOCUMENTS SHALL NOT BE USED BY THE OWNER OR OTHERS ON OTHER PROJECTS, FOR ADDITIONS TO THIS PROJECT OR FOR COMPLETION OF THIS PROJECT BY OTHERS, UNLESS THE ARCHITECT IS ADJUDGED TO BE IN DEFAULT UNDER THIS AGREEMENT, EXCEPT BY AGREEMENT IN WRITING AND WITH APPROPRIATE COMPENSATION TO THE ARCHITECT.

NO.	DATE	REVISION/SUBMISSION
1	11/12/04	FIRE MARSHAL AND C.P. REVISIONS

McKINLEY MIDDLE MAGNET SCHOOL

1550 EDDIE ROBINSON SR. DRIVE
BATON ROUGE, LOUISIANA 70802

Robert M. Coleman & Partners Architects A.I.A.
3377 North Boulevard
Baton Rouge, Louisiana 70806
U.S.A.
tel 225.387.4414
fax 225.387.4693

COLUMN DETAILS

PROJECT NO. 03048	SHEET NO.. A9.3
DRAWN BY CS	
CHECKED BY JS	
DATE October 15, 2004	OF

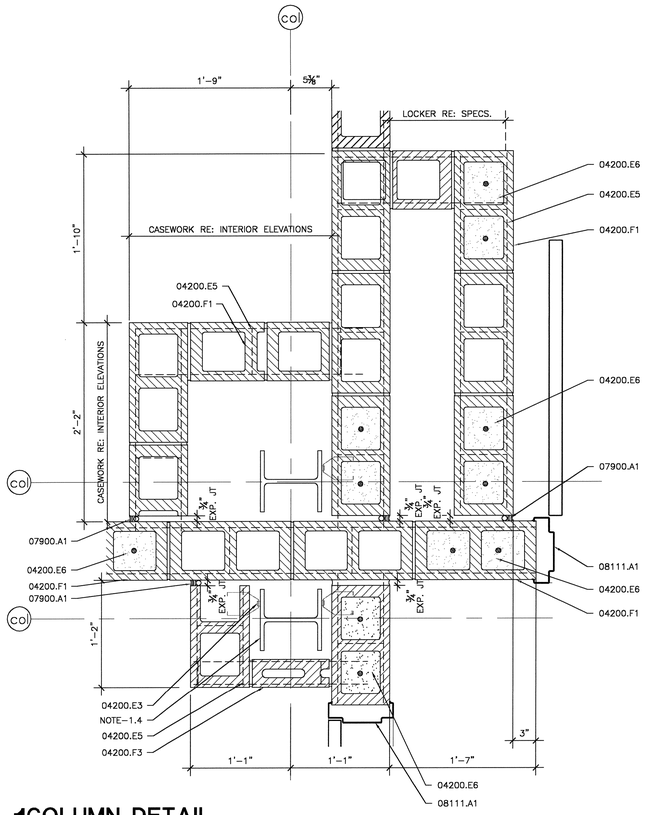

1 COLUMN DETAIL
SCALE: 1 1/2" = 1'-0"

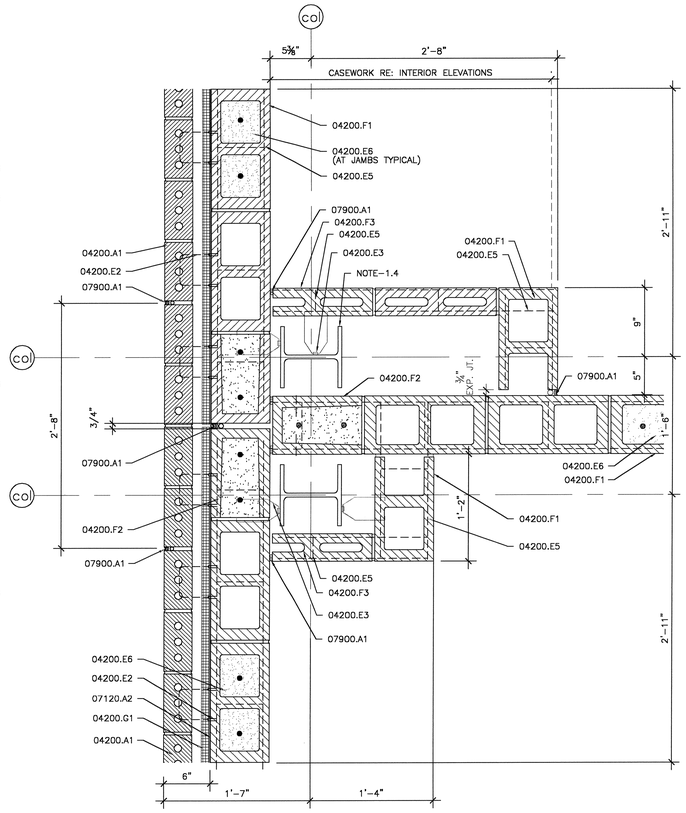

2 COLUMN DETAIL
SCALE: 1 1/2" = 1'-0"

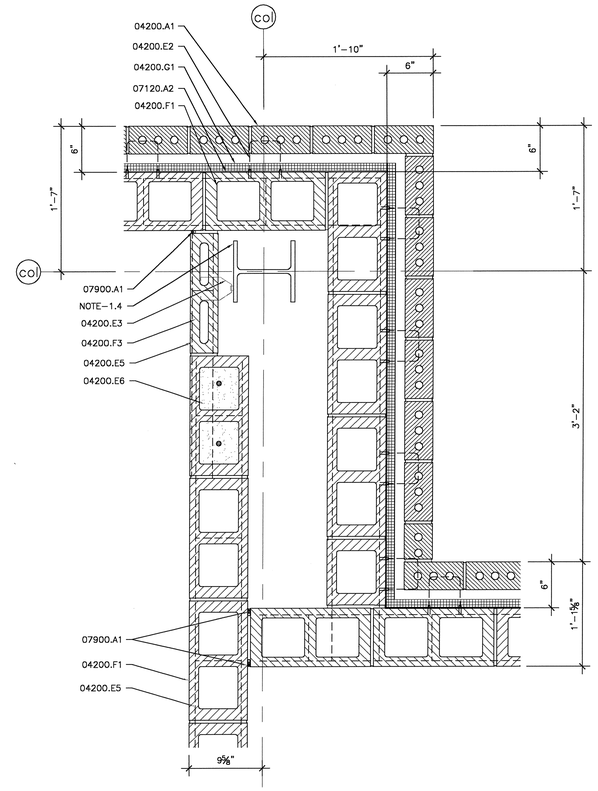

3 COLUMN DETAIL
SCALE: 1 1/2" = 1'-0"

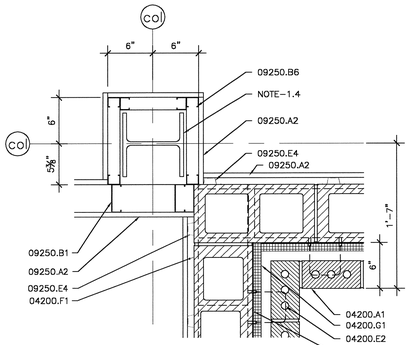

4 COLUMN DETAIL
SCALE: 1 1/2" = 1'-0"

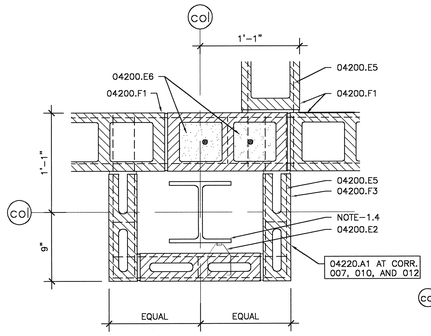

5 COLUMN DETAIL
SCALE: 1 1/2" = 1'-0"

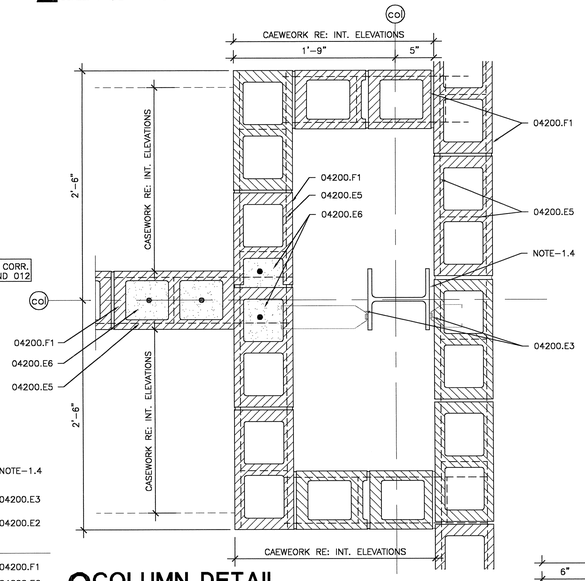

6 COLUMN DETAIL
SCALE: 1 1/2" = 1'-0"

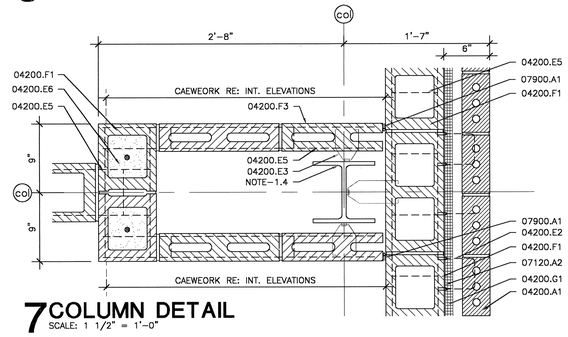

7 COLUMN DETAIL
SCALE: 1 1/2" = 1'-0"

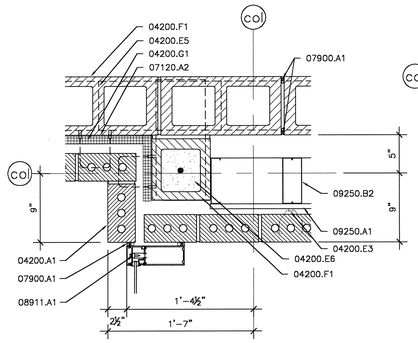

8 COLUMN DETAIL
SCALE: 1 1/2" = 1'-0"

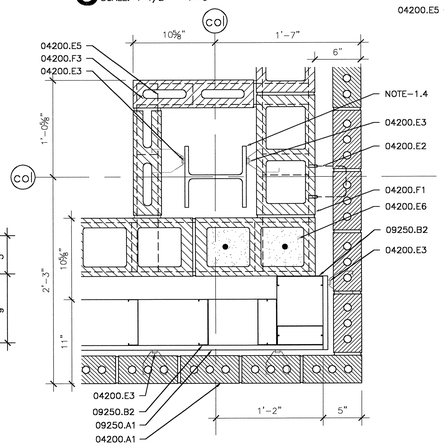

9 COLUMN DETAIL
SCALE: 1 1/2" = 1'-0"

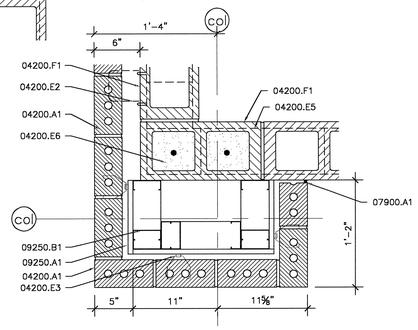

10 COLUMN DETAIL
SCALE: 1 1/2" = 1'-0"

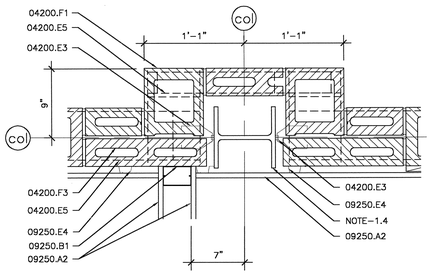

11 COLUMN DETAIL
SCALE: 1 1/2" = 1'-0"

MATERIAL KEYNOTES

04200.A1	4" VENEER FACE BRICK RE: ELEVATIONS AND DETAILS FOR LOCATIONS OF ACCENT COLORS OF BRICK
04200.E2	TWO PIECE LADDER TYPE HORIZONTAL REINFORCING WITH ADJUSTABLE EYE AND WIRE TIE
04200.E3	ADJUSTABLE MASONRY VENEER WALL TIES @ 16" O.C. VERT. MAX. 24" O.C. HORIZ. MAX
04200.E5	LADDER TYPE HORIZONTAL REINFORCING @ 16" o.c. VERTICAL TYPICAL
04200.E6	FILL CORE W/ CONCRETE AND #5 VERTICAL
04200.F1	8 X 8 X 16 CONCRETE MASONRY UNITS
04200.F2	CONCRETE MASONRY U-BLOCK CONCRETE FILLED WITH 2- #5 REBAR CONT.
04200.F3	4" X 8" X 16" CONCRETE MASONRY BLOCK
04200.G1	CAVITY WALL INSULATION
07120.A2	FLUID APPLIED WATERPROOFING OVER CMU
07900.A1	BACKER ROD AND SEALANT
08111.A1	HOLLOW METAL FRAME
08911.A1	ALUMINUM CURTAIN WALLS
09250.A1	5/8" GYPSUM BOARD
09250.A2	5/8" IMPACT RESISTANT GYPSUM BOARD
09250.B1	3-5/8" METAL STUDS
09250.B2	6" METAL STUDS
09250.B6	1-5/8" METAL STUDS @ 16" O.C.
09250.E4	7/8" METAL FURRING CHANNEL @ 16" O.C.
NOTE-1.4	STEEL COLUMN RE: STRUCTURAL

NOTE:

1. FOR BRICK REVEALS REFER. TO EXTERIOR ELEVATION SHEETS FOR LOCATION AND DETAILS.
2. THE LOCATION OF ALL CUT BLOCK WILL TAKE PLACE AT THE CORNERS OF EXTERIOR WALLS AND NOT AT THE WINDOW AND DOOR LOCATIONS.
3. EXTEND THE 4" LADDER TYPE REINFORCING 16" INTO THE 8" BLOCK THAT IT TIES INTO.

KEY PLAN

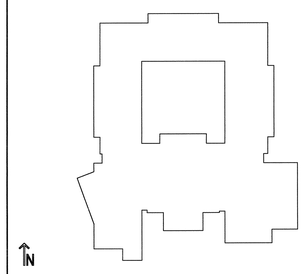

USE OF ARCHITECT'S DRAWINGS, SPECIFICATIONS AND OTHER DOCUMENTS

THE DRAWINGS, SPECIFICATIONS AND OTHER DOCUMENTS PREPARED BY THE ARCHITECT FOR THIS PROJECT ARE INSTRUMENTS OF THE ARCHITECT'S SERVICE FOR USE SOLELY WITH RESPECT TO THIS PROJECT AND, UNLESS OTHERWISE PROVIDED, THE ARCHITECT SHALL BE DEEMED THE AUTHOR OF THESE DOCUMENTS AND SHALL RETAIN ALL COMMON LAW, STATUTORY AND OTHER RESERVED RIGHTS, INCLUDING REPRODUCIBLE COPIES, OF THE ARCHITECT'S DRAWINGS, SPECIFICATIONS AND OTHER DOCUMENTS FOR INFORMATION AND REFERENCE IN CONNECTION WITH THE OWNER'S USE AND OCCUPANCY OF THE PROJECT. THE ARCHITECT'S DRAWINGS, SPECIFICATIONS OR OTHER DOCUMENTS SHALL NOT BE USED BY THE OWNER OR OTHERS ON OTHER PROJECTS, FOR ADDITIONS TO THIS PROJECT OR FOR COMPLETION OF THIS PROJECT BY OTHERS, UNLESS THE ARCHITECT IS ADJUDGED TO BE IN DEFAULT UNDER THIS AGREEMENT, EXCEPT BY AGREEMENT IN WRITING AND WITH APPROPRIATE COMPENSATION TO THE ARCHITECT.

NO.	DATE	REVISION/SUBMISSION
1	11/12/04	FIRE MARSHAL AND C.P. REVISIONS

McKINLEY MIDDLE MAGNET SCHOOL

1550 EDDIE ROBINSON SR. DRIVE
BATON ROUGE, LOUISIANA 70802

Robert M. Coleman & Partners Architects A.I.A.
3377 North Boulevard
Baton Rouge, Louisiana 70805
U.S.A.
tel 225.387.4414
fax 225.387.4693

COLUMN DETAILS

PROJECT NO. 03048	SHEET NO.. A9.4
DRAWN BY CS	
CHECKED BY JS	
DATE October 15, 2004	OF

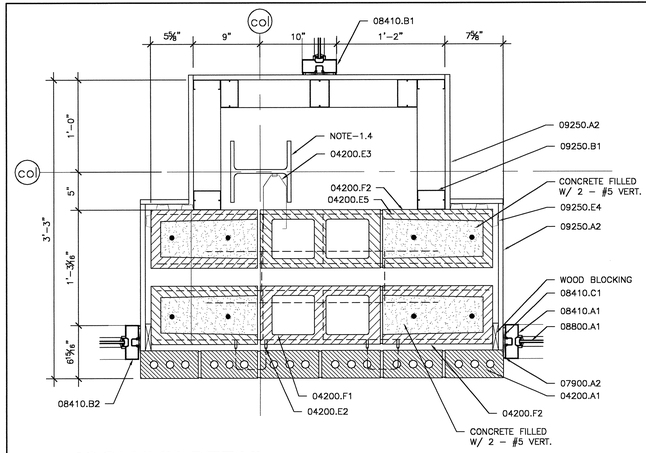

1 COLUMN DETAIL
SCALE: 1 1/2" = 1'-0"

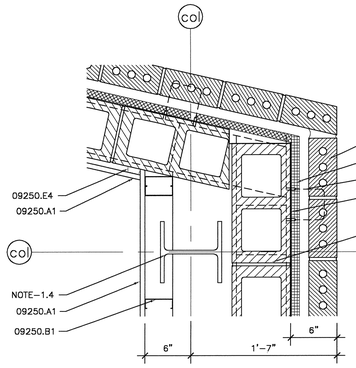

2 COLUMN DETAIL
SCALE: 1 1/2" = 1'-0"

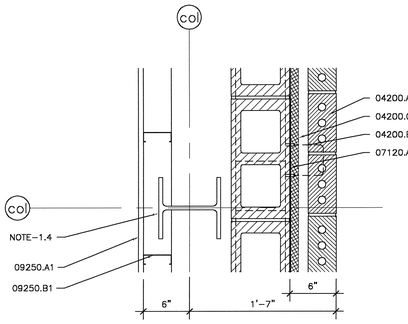

3 COLUMN DETAIL
SCALE: 1 1/2" = 1'-0"

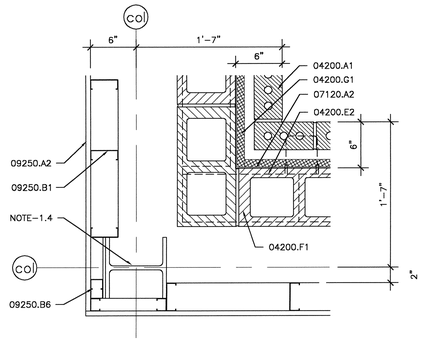

4 COLUMN DETAIL
SCALE: 1 1/2" = 1'-0"

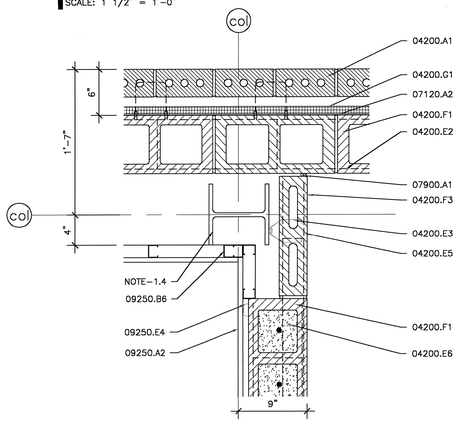

5 COLUMN DETAIL
SCALE: 1 1/2" = 1'-0"

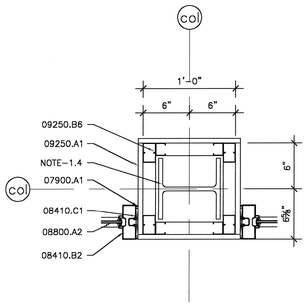

6 COLUMN DETAIL
SCALE: 1 1/2" = 1'-0"

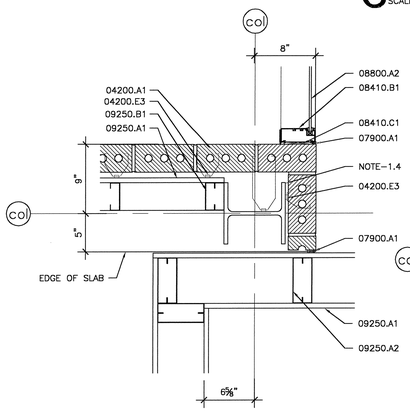

7 COLUMN DETAIL
SCALE: 1 1/2" = 1'-0"

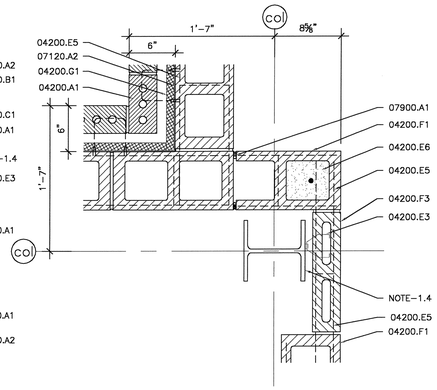

8 COLUMN DETAIL
SCALE: 1 1/2" = 1'-0"

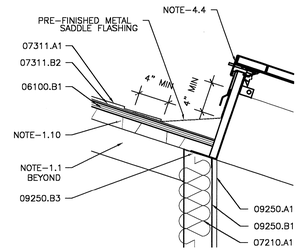

9 ROOF DETAIL
SCALE: 1 1/2" = 1'-0"

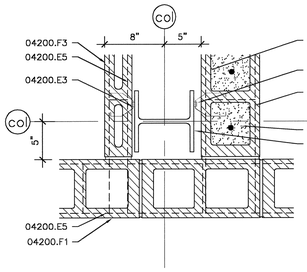

10 COLUMN DETAIL
SCALE: 1 1/2" = 1'-0"

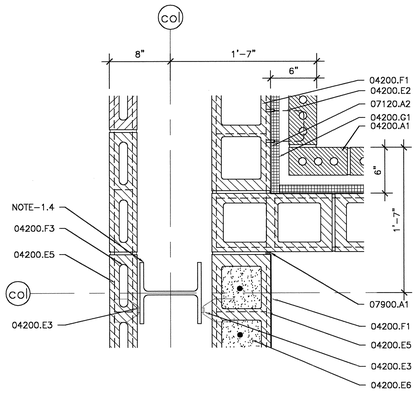

11 COLUMN DETAIL
SCALE: 1 1/2" = 1'-0"

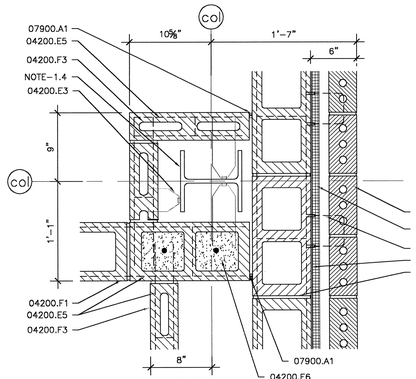

12 COLUMN DETAIL
SCALE: 1 1/2" = 1'-0"

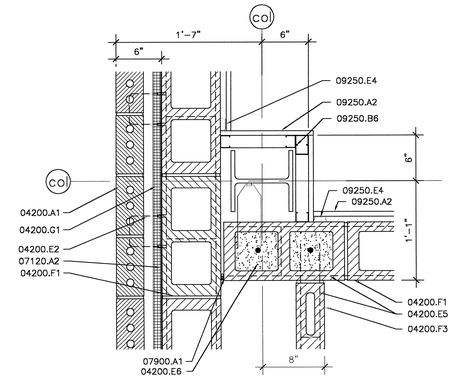

13 COLUMN DETAIL
SCALE: 1 1/2" = 1'-0"

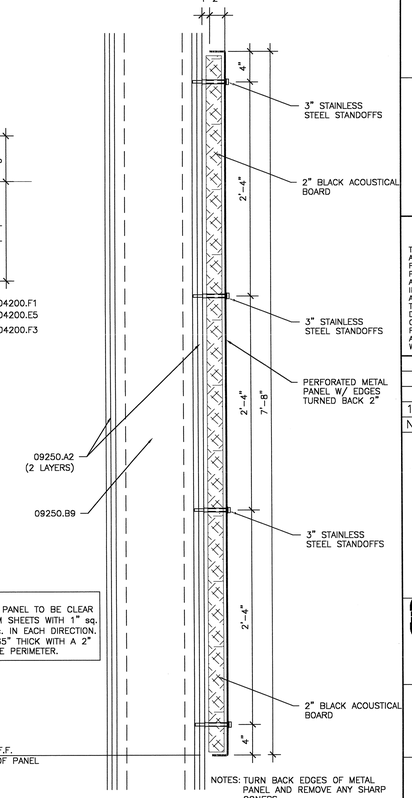

NOTE:
PERFORATED METAL PANEL TO BE CLEAR ANODIZED ALUMINUM SHEETS WITH 1" sq. OPENINGS @ 2" o.c. IN EACH DIRECTION. SHEETS TO BE .1265" THICK WITH A 2" MARGIN AROUND THE PERIMETER.

14 METAL PANEL DETAIL
SCALE: 1 1/2" = 1'-0"

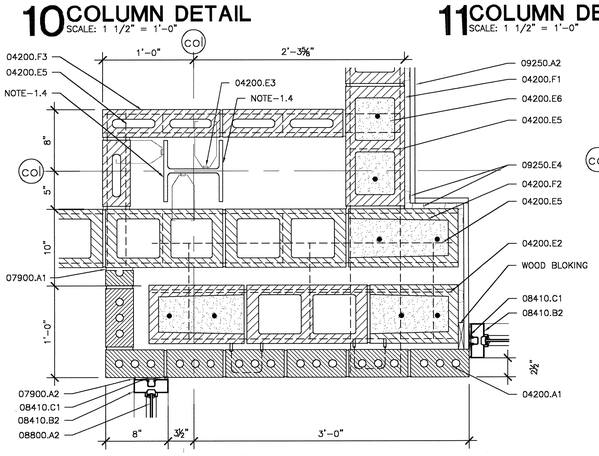

15 COLUMN DETAIL
SCALE: 1 1/2" = 1'-0"

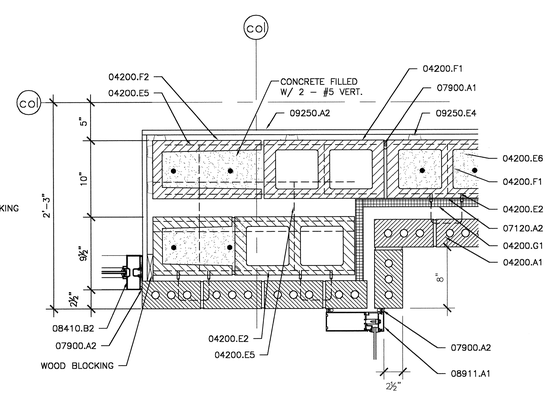

16 COLUMN DETAIL
SCALE: 1 1/2" = 1'-0"

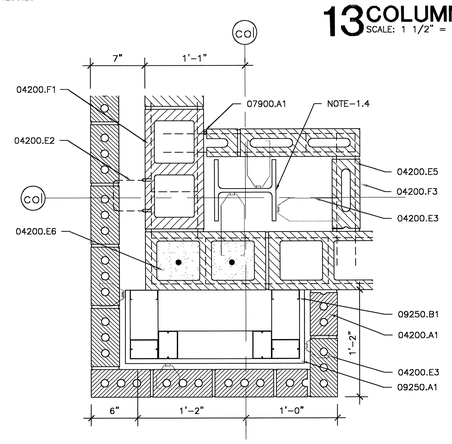

17 COLUMN DETAIL
SCALE: 1 1/2" = 1'-0"

MATERIAL KEYNOTES

04200.A1	4" VENEER FACE BRICK RE: ELEVATIONS AND DETAILS FOR LOCATIONS OF ACCENT COLORS OF BRICK
04200.E2	TWO PIECE LADDER TYPE HORIZONTAL REINFORCING WITH ADJUSTABLE EYE AND WIRE TIE
04200.E3	ADJUSTABLE MASONRY VENEER WALL TIES @ 16" O.C. VERT. MAX. 24" O.C. HORIZ. MAX
04200.E5	LADDER TYPE HORIZONTAL REINFORCING @ 16" o.c. VERTICAL TYPICAL
04200.E6	FILL CORE W/ CONCRETE AND #5 VERTICAL
04200.F1	8 X 8 X 16 CONCRETE MASONRY UNITS
04200.F2	CONCRETE MASONRY U-BLOCK CONCRETE FILLED WITH 2- #5 REBAR CONT.
04200.F3	4" X 8" X 16" CONCRETE MASONRY BLOCK
04200.G1	CAVITY WALL INSULATION
06100.B1	3/4" PLYWOOD SHEATHING
07120.A2	FLUID APPLIED WATERPROOFING OVER CMU
07210.A1	8" BATT. INSULATION
07311.A1	ASPHALT SHINGLES
07311.B2	2 LAYERS OF #15 ASPHALT SATURATED FELT
07900.A1	BACKER ROD AND SEALANT
07900.A2	SEALANT
08410.A1	ALUMINUM STOREFRONT FRAMING (EXTERIOR WINDOWS)
08410.B1	ALUMINUM STOREFRONT FRAMING (INTERIOR)
08410.B2	ALUMINUM STOREFRONT ENTRANCE DOORS & FRAME (INTERIOR)
08410.C1	NEOPRENE SHIM
08800.A1	1/4" TINTED AND HEAT TREATED FLOAT GLASS
08800.A2	1/4" TEMPERED GLASS - INTERIOR GLAZING
08911.A1	ALUMINUM CURTAIN WALLS
09250.A1	5/8" GYPSUM BOARD
09250.A2	5/8" IMPACT RESISTANT GYPSUM BOARD
09250.B1	3-5/8" METAL STUDS
09250.B3	METAL STUD TRACK
09250.B6	1-5/8" METAL STUDS @ 16" O.C.
09250.B9	10" METAL STUDS @ 16"o.c.
09250.E4	7/8" METAL FURRING CHANNEL @ 16" O.C.
NOTE-1.1	PRE-ENGINEERED ROOF TRUSS RE: STRUCTURAL
NOTE-1.10	STEEL DECKING RE: STRUCTURAL
NOTE-1.4	STEEL COLUMN RE: STRUCTURAL
NOTE-4.4	SMOKE VENT RE: MECHANICAL

NOTE:

1. FOR BRICK REVEALS REFER. TO EXTERIOR ELEVATION SHEETS FOR LOCATION AND DETAILS.
2. THE LOCATION OF ALL CUT BLOCK WILL TAKE PLACE AT THE CORNERS OF EXTERIOR WALLS AND NOT AT THE WINDOW AND DOOR LOCATIONS.
3. EXTEND THE 4" LADDER TYPE REINFORCING 16" INTO THE 8" BLOCK THAT IT TIES INTO.

USE OF ARCHITECT'S DRAWINGS, SPECIFICATIONS AND OTHER DOCUMENTS

THE DRAWINGS, SPECIFICATIONS AND OTHER DOCUMENTS PREPARED BY THE ARCHITECT FOR THIS PROJECT ARE INSTRUMENTS OF THE ARCHITECT'S SERVICE FOR USE SOLELY WITH RESPECT TO THIS PROJECT AND, UNLESS OTHERWISE PROVIDED, THE ARCHITECT SHALL BE DEEMED THE AUTHOR OF THESE DOCUMENTS AND SHALL RETAIN ALL COMMON LAW, STATUTORY AND OTHER RESERVED RIGHTS, INCLUDING REPRODUCIBLE COPIES. OF THE ARCHITECT'S DRAWINGS, SPECIFICATIONS AND OTHER DOCUMENTS FOR INFORMATION AND REFERENCE IN CONNECTION WITH THE OWNER'S USE AND OCCUPANCY OF THE PROJECT. THE ARCHITECT'S DRAWINGS, SPECIFICATIONS OR OTHER DOCUMENTS SHALL NOT BE USED BY THE OWNER OR OTHERS ON OTHER PROJECTS, FOR ADDITIONS TO THIS PROJECT OR FOR COMPLETION OF THIS PROJECT BY OTHERS, UNLESS THE ARCHITECT IS ADJUDGED TO BE IN DEFAULT UNDER THIS AGREEMENT, EXCEPT BY AGREEMENT IN WRITING AND WITH APPROPRIATE COMPENSATION TO THE ARCHITECT.

NO.	DATE	REVISION/SUBMISSION
1	11/12/04	FIRE MARSHAL AND C.P. REVISIONS

McKINLEY MIDDLE MAGNET SCHOOL

1550 EDDIE ROBINSON SR. DRIVE
BATON ROUGE, LOUISIANA 70802

Robert M. Coleman & Partners Architects A.I.A.
3377 North Boulevard
Baton Rouge, Louisiana 70806
U.S.A.
tel 225.387.4414
fax 225.387.4693

COLUMN DETAILS

PROJECT NO. 03048	SHEET NO.. A9.5
DRAWN BY CS, JM	
CHECKED BY JS	
DATE October 15, 2004	OF

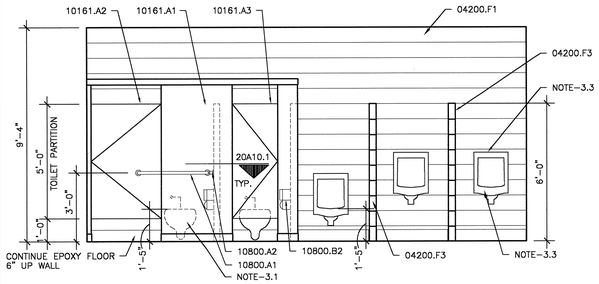

1 BOYS 127, 601, 701, 801
SCALE: 3/8" = 1'-0"

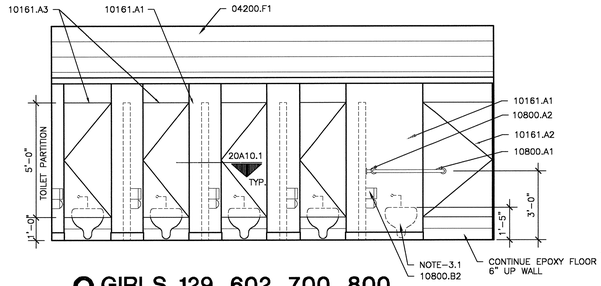

2 GIRLS 129, 602, 700, 800
SCALE: 3/8" = 1'-0"

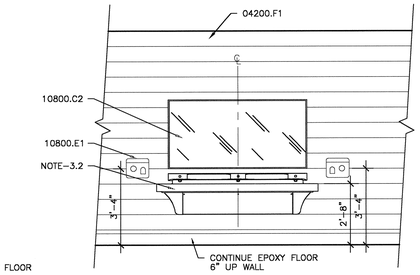

3 TYPICAL RESTROOM ELEVATION
SCALE: 3/8" = 1'-0"

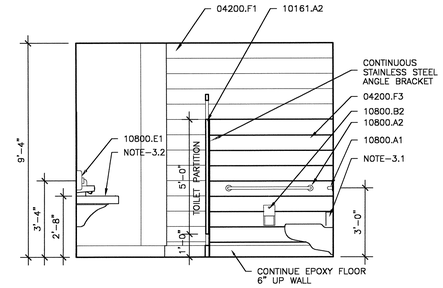

4 TYPICAL RESTROOM ELEVATION
SCALE: 3/8" = 1'-0"

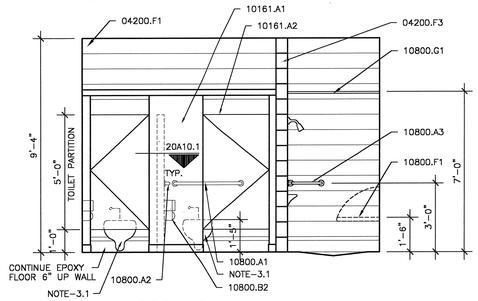

5 BOYS 305

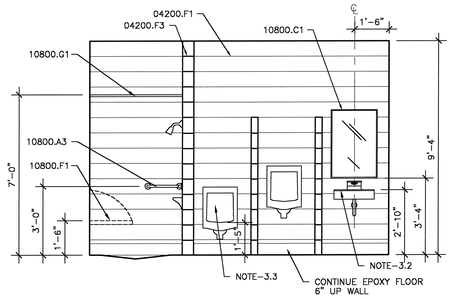

6 BOYS 305
SCALE: 3/8" = 1'-0"

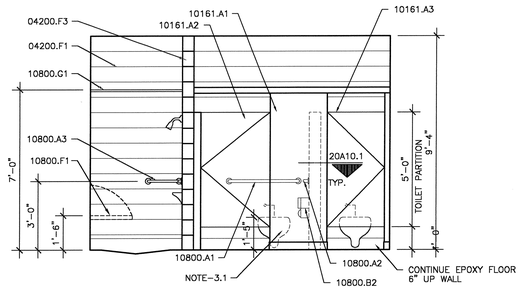

7 GIRLS 308
SCALE: 3/8" = 1'-0"

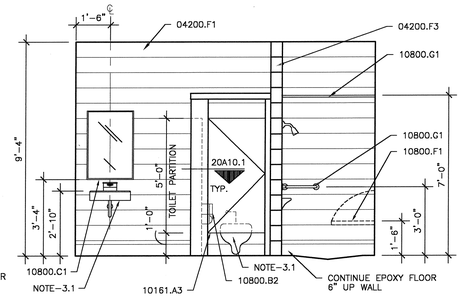

8 GIRLS 308
SCALE: 3/8" = 1'-0"

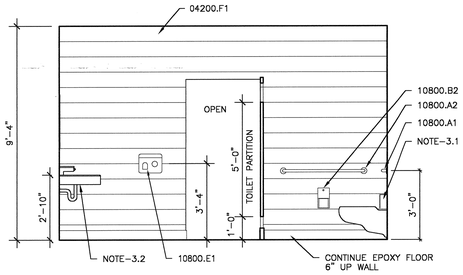

9 BOYS AND GIRLS 305 AND 308
SCALE: 3/8" = 1'-0"

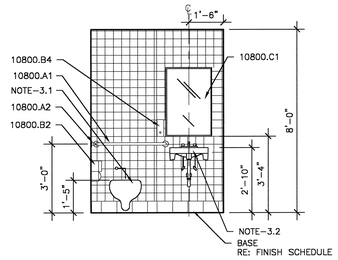

10 TOILET ROOM 124
SCALE: 3/8" = 1'-0"

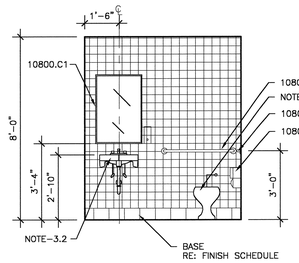

11 TOILET ROOM 110
SCALE: 3/8" = 1'-0"

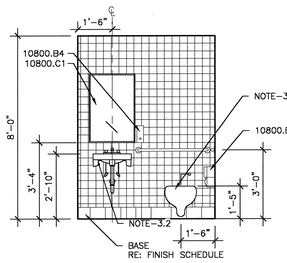

12 TOILET ROOM 205, 215, 604 704 AND 906
SCALE: 3/8" = 1'-0"

NOTE: DELETE TILE FROM WALLS FOR ROOMS THAT HAVE CMU WALLS

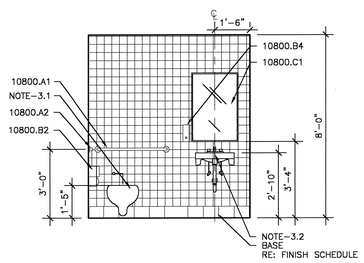

13 TOILET ROOM 417 AND 803
SCALE: 3/8" = 1'-0"

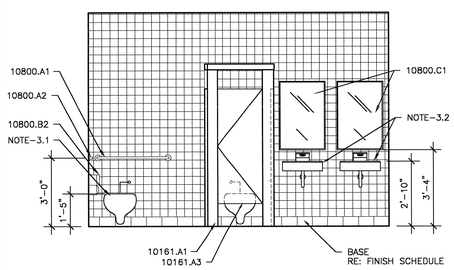

14 TOILET ROOM 213
SCALE: 3/8" = 1'-0"

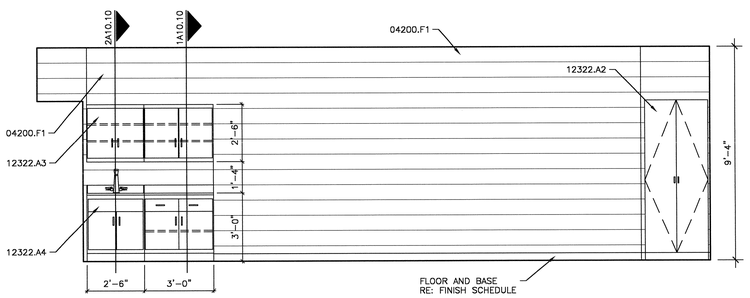

15 TYPICAL CLASSROOM ELEVATION
SCALE: 3/8" = 1'-0"

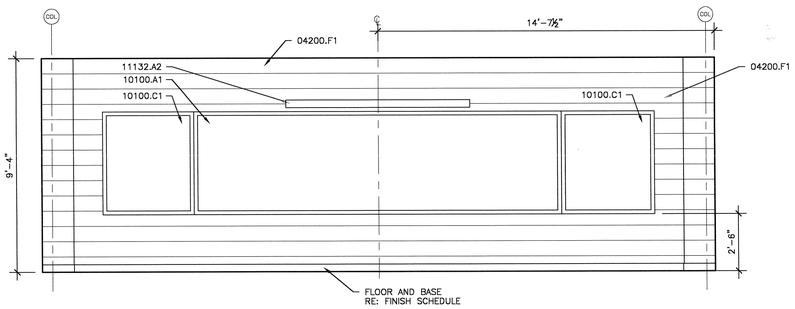

16 TYPICAL CLASSROOM ELEVATION
SCALE: 3/8" = 1'-0"

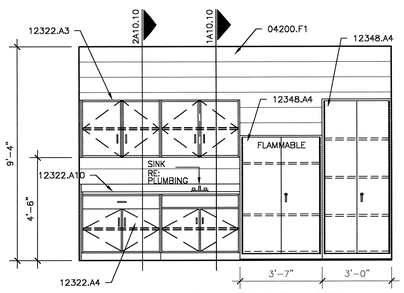

17 SHARED STORAGE 200
SCALE: 3/8" = 1'-0"

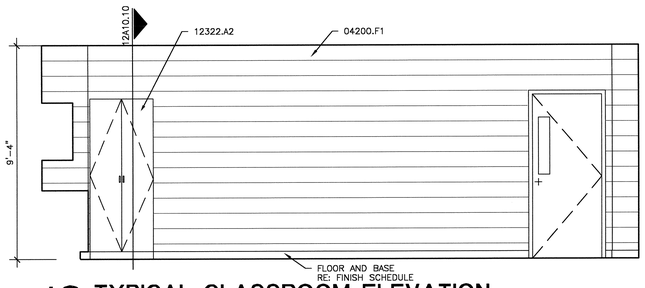

18 TYPICAL CLASSROOM ELEVATION
SCALE: 3/8" = 1'-0"

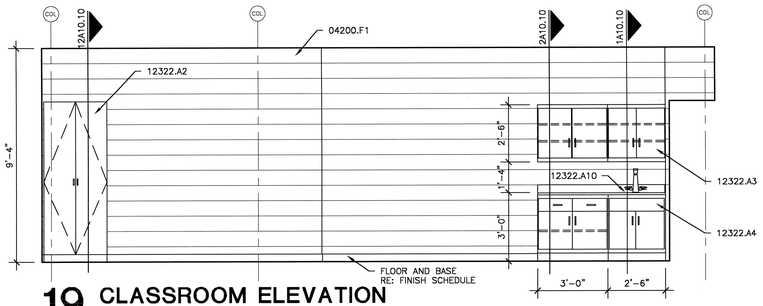

19 CLASSROOM ELEVATION 613, 713 AND 812
SCALE: 3/8" = 1'-0"

MATERIAL KEYNOTES

04200.F1	8 X 8 X 16 CONCRETE MASONRY UNITS
04200.F3	4" X 8" X 16" CONCRETE MASONRY BLOCK
10100.A1	WHITE MARKER BOARD (DRY-ERASE) (4'H X 16'W)
10100.C1	TACKBOARD (4'H X 4'W)
10161.A1	TOILET PARTITION
10161.A2	36" TOILET PARTITION DOOR
10161.A3	24" TOILET PARTITION DOOR
10800.A1	36" GRAB BAR
10800.A2	42" GRAB BAR
10800.A3	ADA SHOWER GRAB BAR
10800.B2	TOILET TISSUE DISPENSER (NOT IN CONTRACT)
10800.B4	SOAP DISPENSER – WALL MOUNT (NOT IN CONTRACT)
10800.C1	GLASS MIRROR (24" X 36")
10800.C2	GLASS MIRROR (36" X 72")
10800.E1	ELECTRIC HAND DRYER
10800.F1	FOLD-DOWN SHOWER SEAT
10800.G1	SHOWER ROD AND CURTAIN
11132.A2	MANUALLY OPERATED, WALL MOUNTED PROJECTION SCREEN (8' W X 8' H)
12322.A10	PLASTIC LAMINATE COUNTERTOP
12322.A2	PLASTIC LAMINATED FACE CASEWORK WARDROBE CABINET
12322.A3	PLASTIC LAMINATED FACE CASEWORK UPPER CABINET
12322.A4	PLASTIC LAMINATED FACE CASEWORK BASE CABINET
12348.A4	SCIENCE LAB CASEWORK
NOTE-3.1	TOILET RE: PLUMBING
NOTE-3.2	LAVATORY RE: PLUMBING
NOTE-3.3	URINAL RE: PLUMBING

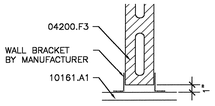

20 DETAIL
SCALE: 1 1/2" = 1'-0"

KEY PLAN

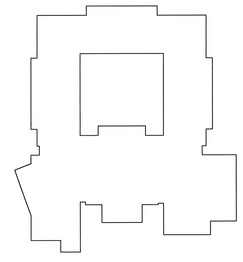

USE OF ARCHITECT'S DRAWINGS, SPECIFICATIONS AND OTHER DOCUMENTS

THE DRAWINGS, SPECIFICATIONS AND OTHER DOCUMENTS PREPARED BY THE ARCHITECT FOR THIS PROJECT ARE INSTRUMENTS OF THE ARCHITECT'S SERVICE FOR USE SOLELY WITH RESPECT TO THIS PROJECT AND, UNLESS OTHERWISE PROVIDED, THE ARCHITECT SHALL BE DEEMED THE AUTHOR OF THESE DOCUMENTS AND SHALL RETAIN ALL COMMON LAW, STATUTORY AND OTHER RESERVED RIGHTS, INCLUDING REPRODUCIBLE COPIES, OF THE ARCHITECT'S DRAWINGS, SPECIFICATIONS AND OTHER DOCUMENTS FOR INFORMATION AND REFERENCE IN CONNECTION WITH THE OWNER'S USE AND OCCUPANCY OF THE PROJECT. THE ARCHITECT'S DRAWINGS, SPECIFICATIONS OR OTHER DOCUMENTS SHALL NOT BE USED BY THE OWNER OR OTHERS ON OTHER PROJECTS, FOR ADDITIONS TO THIS PROJECT OR FOR COMPLETION OF THIS PROJECT BY OTHERS, UNLESS THE ARCHITECT IS ADJUDGED TO BE IN DEFAULT UNDER THIS AGREEMENT, EXCEPT BY AGREEMENT IN WRITING AND WITH APPROPRIATE COMPENSATION TO THE ARCHITECT.

NO.	DATE	REVISION/SUBMISSION
1	11/12/04	FIRE MARSHAL AND C.P. REVISIONS

McKINLEY MIDDLE MAGNET SCHOOL

1550 EDDIE ROBINSON SR. DRIVE
BATON ROUGE, LOUISIANA 70802

Robert M. Coleman & Partners Architects A.I.A.
3377 North Boulevard
Baton Rouge, Louisiana 70806
U.S.A.
tel 225.387.4414
fax 225.387.4693

INTERIOR ELEVATIONS

PROJECT NO. 0304B	SHEET NO.. A10.1
DRAWN BY CS, BH, JM	
CHECKED BY JS	
DATE October 15, 2004	_____ OF _____

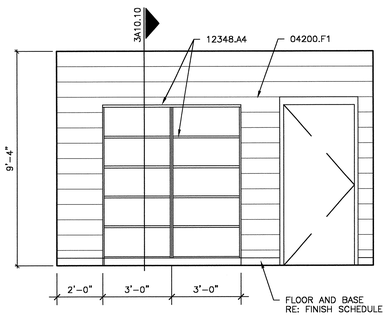

1 SHARED STORAGE 200
SCALE: 3/8" = 1'-0"

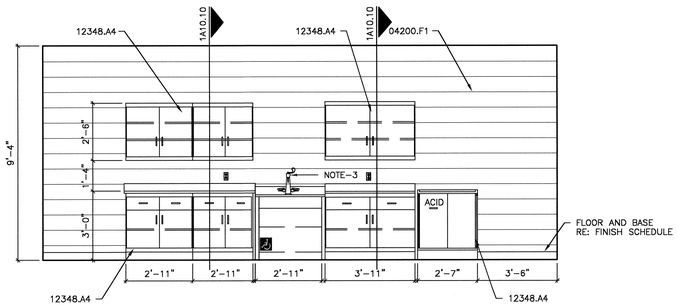

2 SCIENCE STORAGE/PREPARATION
SCALE: 3/8" = 1'-0"

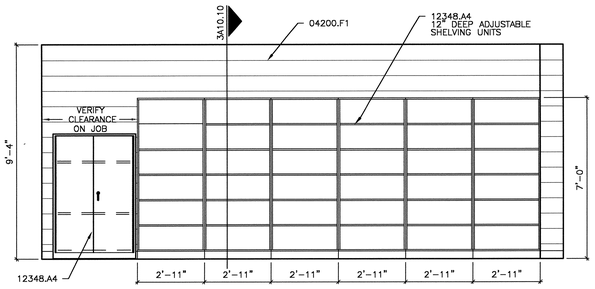

3 SCIENCE STORAGE/PREPARATION
SCALE: 3/8" = 1'-0"

MATERIAL KEYNOTES

04200.F1	8 X 8 X 16 CONCRETE MASONRY UNITS
10100.A1	WHITE MARKER BOARD (DRY-ERASE) (4'H X 16'W)
10100.C1	TACKBOARD (4'H X 4'W)
11132.A2	MANUALLY OPERATED, WALL MOUNTED PROJECTION SCREEN (8' W X 8' H)
12322.A1	PLASTIC LAMINATED FACE CASEWORK
12322.A10	PLASTIC LAMINATE COUNTERTOP
12322.A11	ALL OPEN STORAGE SHELVING W/ ADJUSTABLE SHELVES AND ONE FIXED. 18" DEEP x 84" HIGH RE: ELEVATION FOR WIDTH
12322.A3	PLASTIC LAMINATED FACE CASEWORK UPPER CABINET
12322.A4	PLASTIC LAMINATED FACE CASEWORK BASE CABINET
12348.A4	SCIENCE LAB CASEWORK
12348.B1	SAFETY GOGGLE CABINET
12348.B2	FIRE BLANKET
12348.B4	SAFETY SHOWER
12348.B5	SINK WITH HOT AND COLD WATER
NOTE-3	RE: PLUMBING

NOTE:
DO NOT STUB UP ROUGH INS NO MORE THAN 12" ABOVE THE FINISHED FLOOR

NOTE:
POWER AND DATA REQUIREMENTS SHOULD BE VERIFIED BY ELECTRICAL ENGINEER

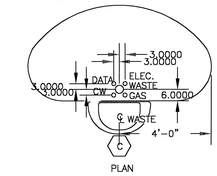

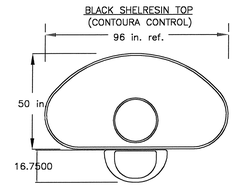

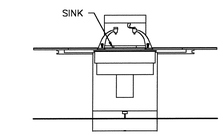

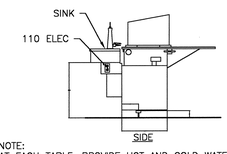

NOTE:
AT EACH TABLE, PROVIDE HOT AND COLD WATER, GAS, GFI PROTECTED OUTLET, AND DATA. (NO GAS AT MIDDLE SCHOOL)

15 STUDENT LAB TABLE
SCALE: 3/8" = 1'-0"

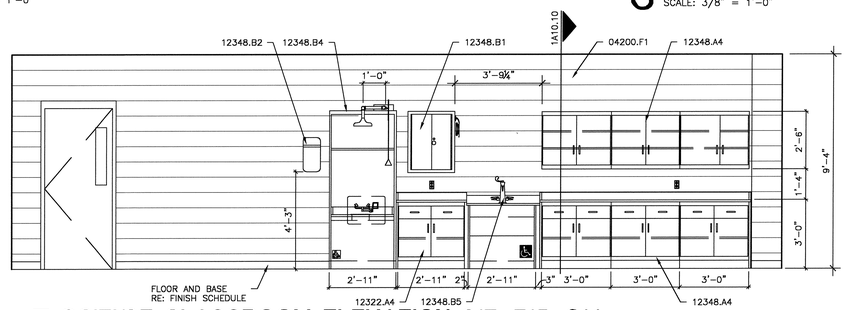

5 SCIENCE CLASSROOM ELEVATION 617, 715, 814
SCALE: 3/8" = 1'-0"

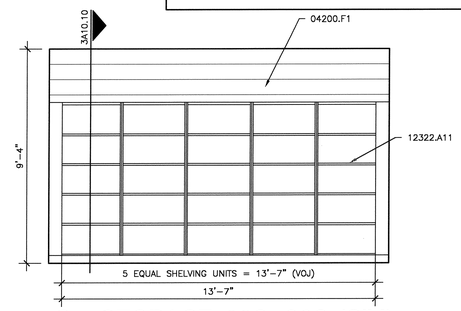

6 STORAGE 603, 803 (SIM)
SCALE: 3/8" = 1'-0"

4 NOT USED
SCALE: 3/8" = 1'-0"

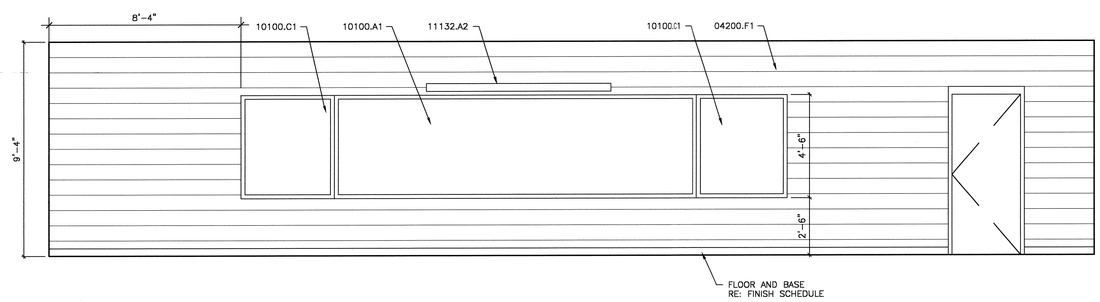

7 SCIENCE CLASSROOM ELEVATION 617, 715, 814
SCALE: 3/8" = 1'-0"

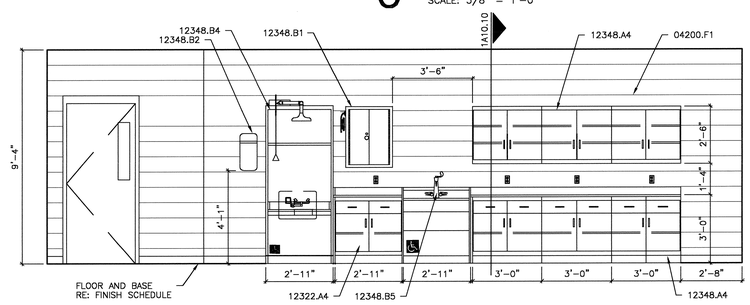

8 SCIENCE CLASSROOM/LAB ELEVATION 619, 717, 816
SCALE: 3/8" = 1'-0"

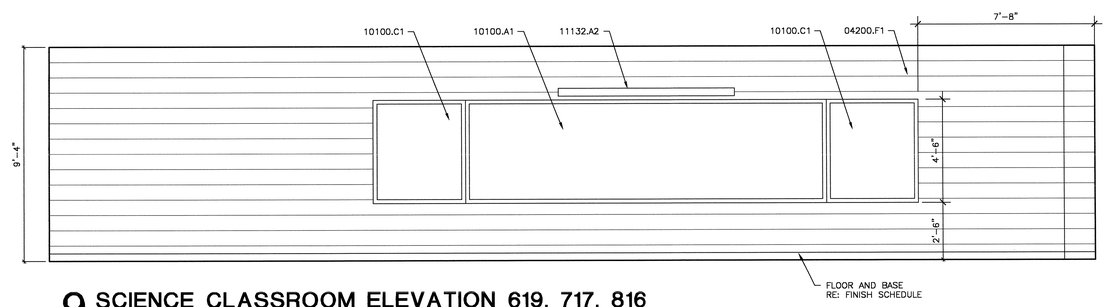

9 SCIENCE CLASSROOM ELEVATION 619, 717, 816
SCALE: 3/8" = 1'-0"

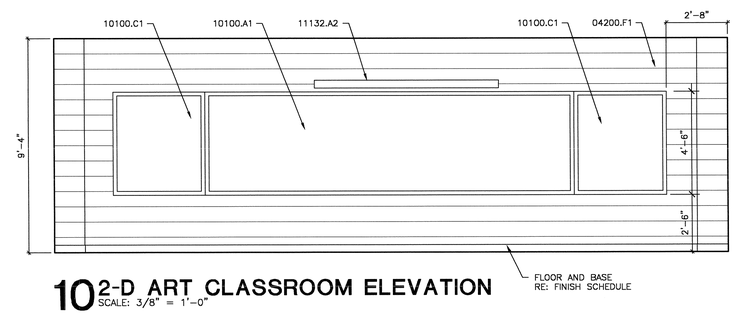

10 2-D ART CLASSROOM ELEVATION
SCALE: 3/8" = 1'-0"

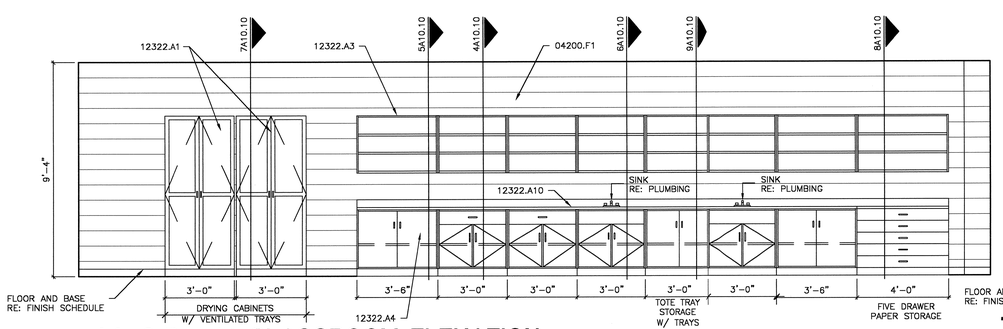

11 2-D ART CLASSROOM ELEVATION
SCALE: 3/8" = 1'-0"

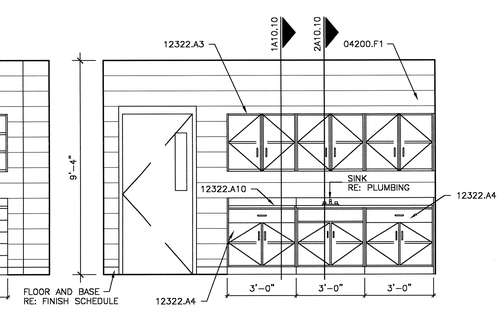

12 TEACHER PLANNING AREA 605
SCALE: 3/8" = 1'-0"

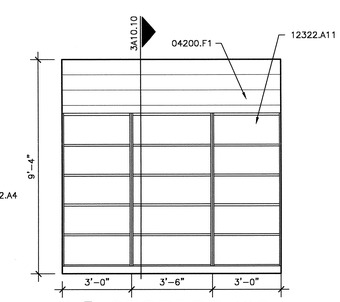

13 STORAGE 103
SCALE: 3/8" = 1'-0"

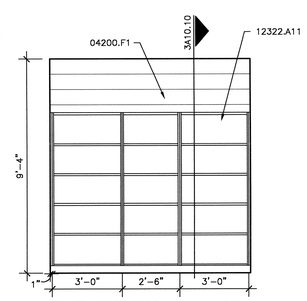

14 STORAGE 104
SCALE: 3/8" = 1'-0"

USE OF ARCHITECT'S DRAWINGS, SPECIFICATIONS AND OTHER DOCUMENTS

THE DRAWINGS, SPECIFICATIONS AND OTHER DOCUMENTS PREPARED BY THE ARCHITECT FOR THIS PROJECT ARE INSTRUMENTS OF THE ARCHITECT'S SERVICE FOR USE SOLELY WITH RESPECT TO THIS PROJECT AND, UNLESS OTHERWISE PROVIDED, THE ARCHITECT SHALL BE DEEMED THE AUTHOR OF THESE DOCUMENTS AND SHALL RETAIN ALL COMMON LAW, STATUTORY AND OTHER RESERVED RIGHTS, INCLUDING REPRODUCIBLE COPIES, OF THE ARCHITECT'S DRAWINGS, SPECIFICATIONS AND OTHER DOCUMENTS FOR INFORMATION AND REFERENCE IN CONNECTION WITH THE OWNER'S USE AND OCCUPANCY OF THE PROJECT. THE ARCHITECT'S DRAWINGS, SPECIFICATIONS OR OTHER DOCUMENTS SHALL NOT BE USED BY THE OWNER OR OTHERS ON OTHER PROJECTS, FOR ADDITIONS TO THIS PROJECT OR FOR COMPLETION OF THIS PROJECT BY OTHERS, UNLESS THE ARCHITECT IS ADJUDGED TO BE IN DEFAULT UNDER THIS AGREEMENT, EXCEPT BY AGREEMENT IN WRITING AND WITH APPROPRIATE COMPENSATION TO THE ARCHITECT.

NO.	DATE	REVISION/SUBMISSION
1	11/12/04	FIRE MARSHAL AND C.P. REVISIONS

McKINLEY MIDDLE MAGNET SCHOOL

1550 EDDIE ROBINSON SR. DRIVE
BATON ROUGE, LOUISIANA 70802

Robert M. Coleman Architects & Partners A.I.A.
3377 North Boulevard
Baton Rouge, Louisiana 70805
U.S.A.
tel 225.387.4414
fax 225.387.4693

INTERIOR ELEVATIONS

PROJECT NO. 03048	SHEET NO.. A10.2
DRAWN BY CS, BH, JM	
CHECKED BY JS	
DATE October 15, 2004	OF

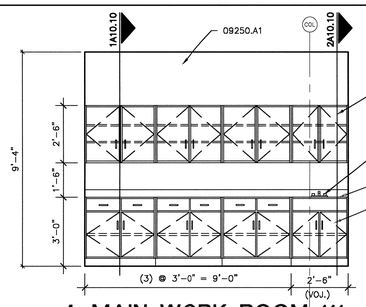

1 MAIN WORK ROOM 111
SCALE: 3/8" = 1'-0"

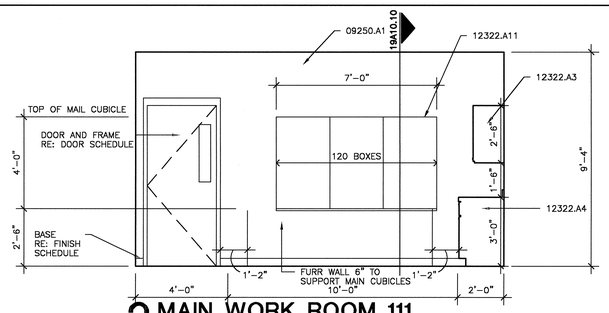

2 MAIN WORK ROOM 111
SCALE: 3/8" = 1'-0"

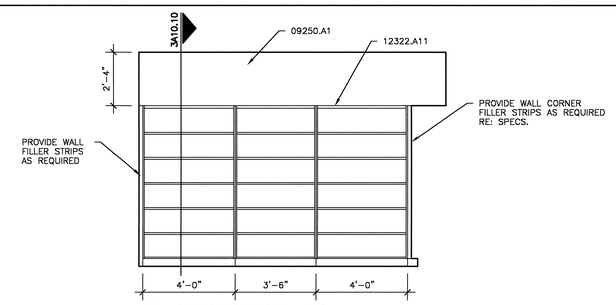

3 STORAGE 112
SCALE: 3/8" = 1'-0"

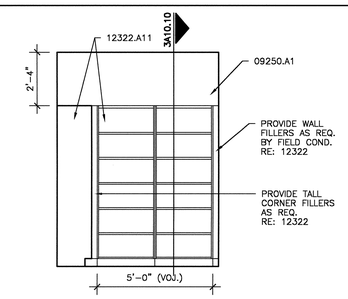

4 STORAGE 112
SCALE: 3/8" = 1'-0"

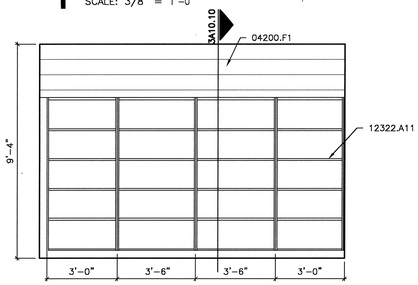

5 PROP STORAGE 505
SCALE: 3/8" = 1'-0"

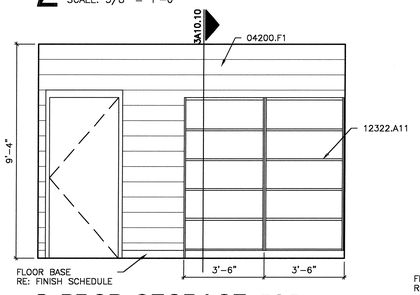

6 PROP STORAGE 505
SCALE: 3/8" = 1'-0"

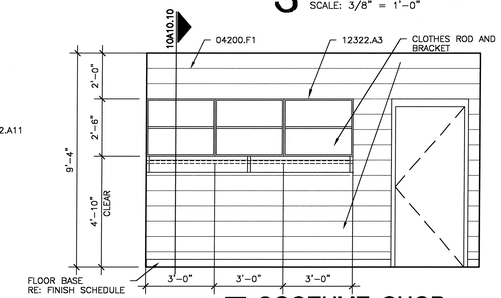

7 COSTUME SHOP
SCALE: 3/8" = 1'-0"

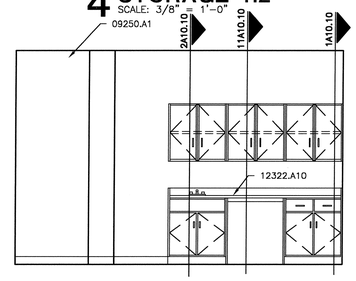

8 NURSE / HEALTH 123
SCALE: 3/8" = 1'-0"

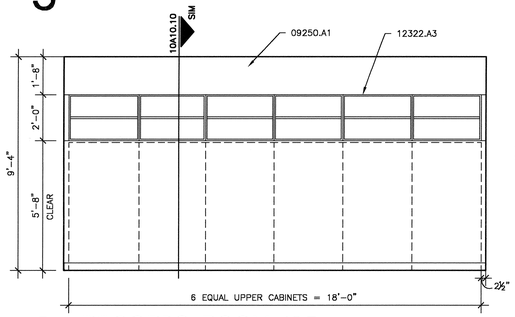

9 RECORDS ROOM 105
SCALE: 3/8" = 1'-0"

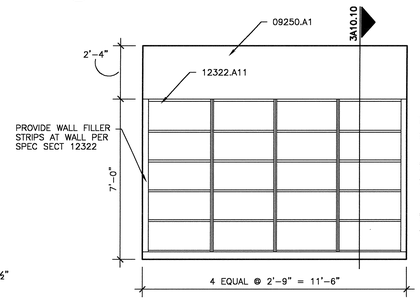

10 WORK STORAGE 109
SCALE: 3/8" = 1'-0"

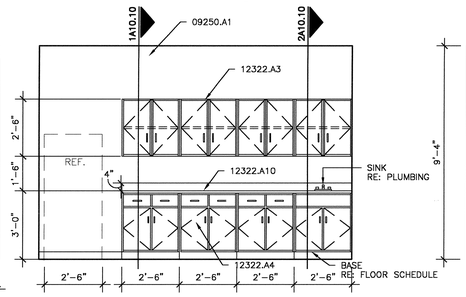

11 STAFF DINING 117
SCALE: 3/8" = 1'-0"

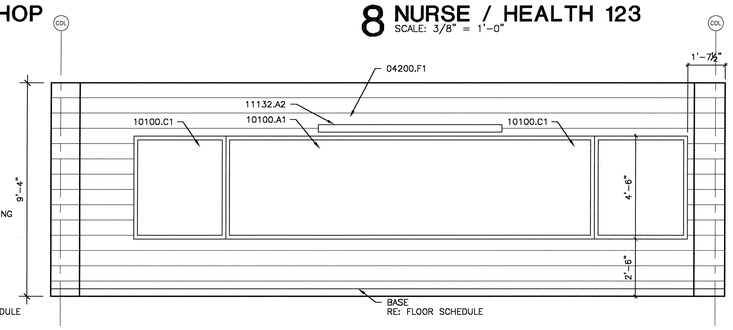

12 3D ART CLASSROOM 133
SCALE: 3/8" = 1'-0"

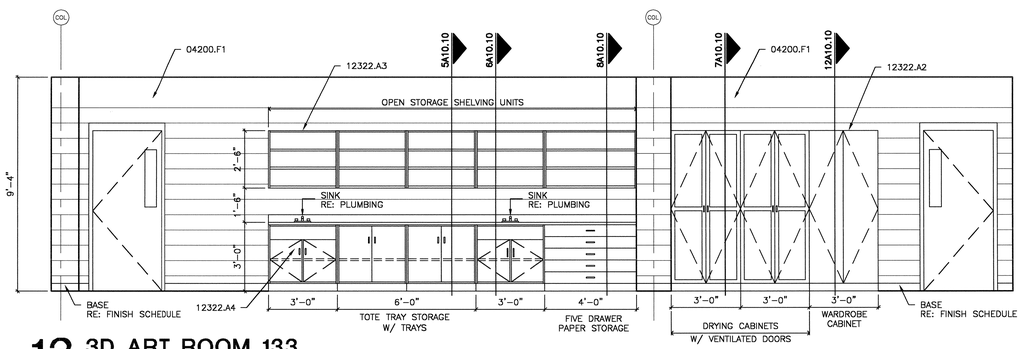

13 3D ART ROOM 133
SCALE: 3/8" = 1'-0"

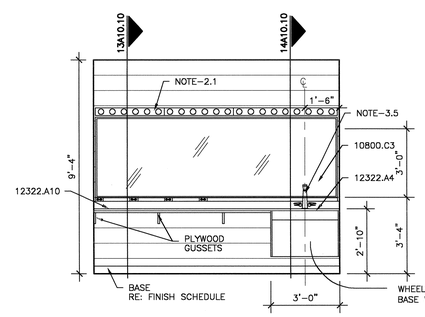

14 DRESSING AREA 416
SCALE: 3/8" = 1'-0"

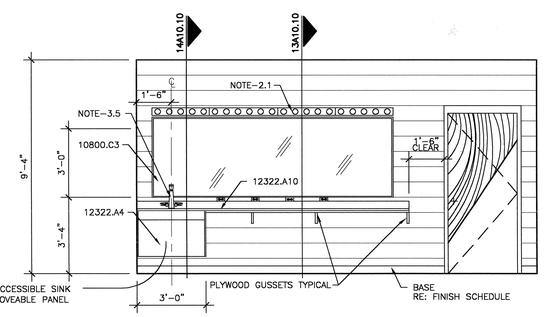

15 DRESSING AREA 415
SCALE: 3/8" = 1'-0"

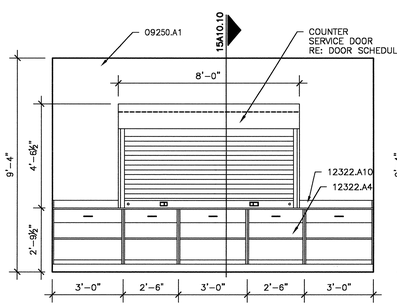

16 CONCESSION 501
SCALE: 3/8" = 1'-0"

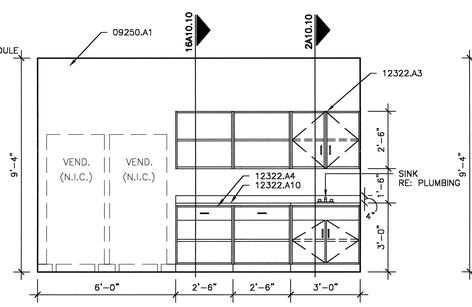

17 CONCESSION 501
SCALE: 3/8" = 1'-0"

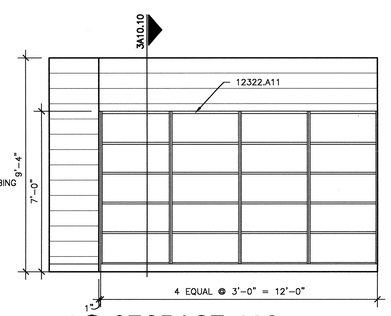

18 STORAGE 603
SCALE: 3/8" = 1'-0"

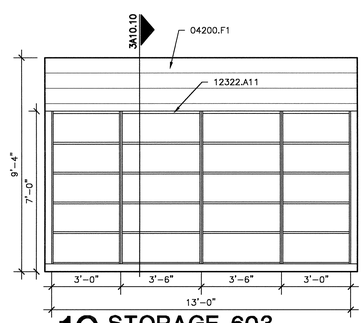

19 STORAGE 603
SCALE: 3/8" = 1'-0"

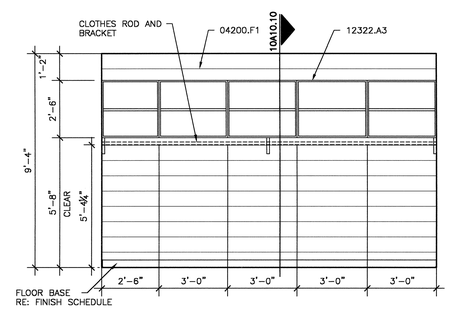

20 COSTUME SHOP
SCALE: 3/8" = 1'-0"

MATERIAL KEYNOTES

04200.F1	8 X 8 X 16 CONCRETE MASONRY UNITS
09250.A1	5/8" GYPSUM BOARD
10100.A1	WHITE MARKER BOARD (DRY-ERASE) (4'H X 16'W)
10100.C1	TACKBOARD (4'H X 4'W)
10800.C3	GLASS MIRROR (3'-6" X 10'-6")
11132.A2	MANUALLY OPERATED, WALL MOUNTED PROJECTION SCREEN (8' W X 8' H)
12322.A10	PLASTIC LAMINATE COUNTERTOP
12322.A11	ALL OPEN STORAGE SHELVING W/ ADJUSTABLE SHELVES AND ONE FIXED, 18" DEEP x 84" HIGH RE: ELEVATION FOR WIDTH
12322.A2	PLASTIC LAMINATED FACE CASEWORK WARDROBE CABINET
12322.A3	PLASTIC LAMINATED FACE CASEWORK UPPER CABINET
12322.A4	PLASTIC LAMINATED FACE CASEWORK BASE CABINET
NOTE-2.1	LIGHT FIXTURE RE: ELECTRICAL
NOTE-3.5	SINK RE: PLUMBING

KEY PLAN

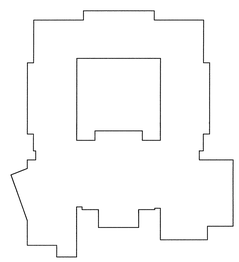

USE OF ARCHITECT'S DRAWINGS, SPECIFICATIONS AND OTHER DOCUMENTS

THE DRAWINGS, SPECIFICATIONS AND OTHER DOCUMENTS PREPARED BY THE ARCHITECT FOR THIS PROJECT ARE INSTRUMENTS OF THE ARCHITECT'S SERVICE FOR USE SOLELY WITH RESPECT TO THIS PROJECT AND, UNLESS OTHERWISE PROVIDED, THE ARCHITECT SHALL BE DEEMED THE AUTHOR OF THESE DOCUMENTS AND SHALL RETAIN ALL COMMON LAW, STATUTORY AND OTHER RESERVED RIGHTS, INCLUDING REPRODUCIBLE COPIES, OF THE ARCHITECT'S DRAWINGS, SPECIFICATIONS AND OTHER DOCUMENTS FOR INFORMATION AND REFERENCE IN CONNECTION WITH THE OWNER'S USE AND OCCUPANCY OF THE PROJECT. THE ARCHITECT'S DRAWINGS, SPECIFICATIONS OR OTHER DOCUMENTS SHALL NOT BE USED BY THE OWNER OR OTHERS ON OTHER PROJECTS, FOR ADDITIONS TO THIS PROJECT OR FOR COMPLETION OF THIS PROJECT BY OTHERS, UNLESS THE ARCHITECT IS ADJUDGED TO BE IN DEFAULT UNDER THIS AGREEMENT, EXCEPT BY AGREEMENT IN WRITING AND WITH APPROPRIATE COMPENSATION TO THE ARCHITECT.

NO.	DATE	REVISION/SUBMISSION
1	11/12/04	FIRE MARSHAL AND C.P. REVISIONS

McKINLEY MIDDLE MAGNET SCHOOL

1550 EDDIE ROBINSON SR. DRIVE
BATON ROUGE, LOUISIANA 70802

Robert M. Coleman & Partners Architects A.I.A.
3377 North Boulevard
Baton Rouge, Louisiana 70806 U.S.A.
tel 225.387.4414
fax 225.387.4693

INTERIOR ELEVATIONS

PROJECT NO. 03048	SHEET NO.. A10.3
DRAWN BY CS, BH, JM	
CHECKED BY JS	
DATE October 15, 2004	OF

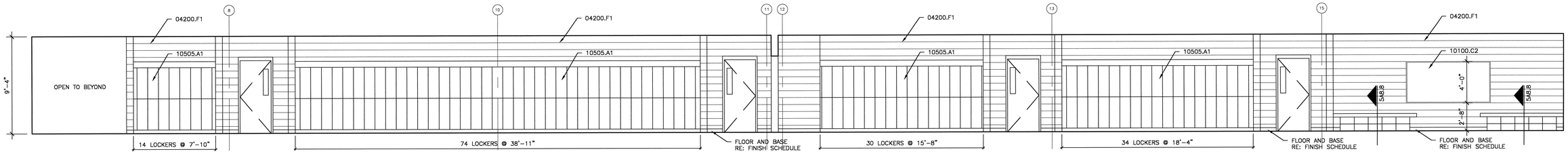

1 CORRIDOR 016 AND CORRIDOR 014 (O.H.)
SCALE: 1/4" = 1'-0"

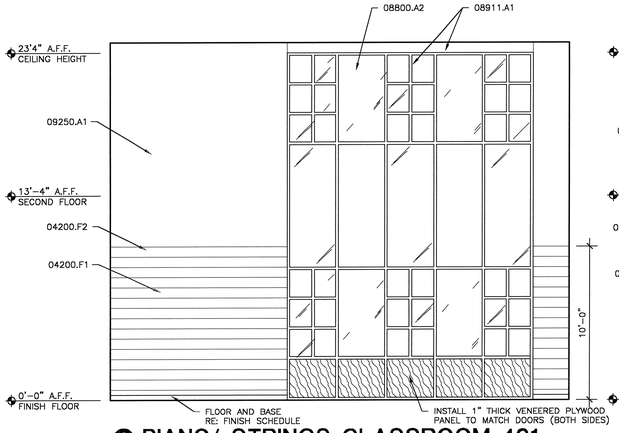

2 PIANO/ STRINGS CLASSROOM 401
SCALE: 1/4" = 1'-0"

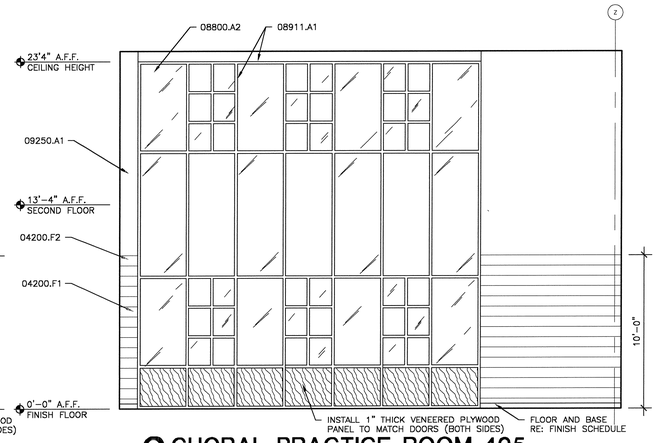

3 CHORAL PRACTICE ROOM 405
SCALE: 1/4" = 1'-0"

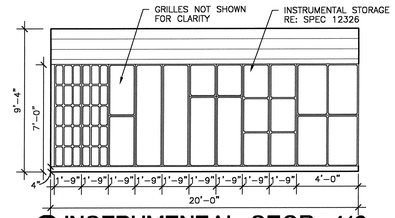

6 INSTRUMENTAL STOR. 410
SCALE: 1/4" = 1'-0"

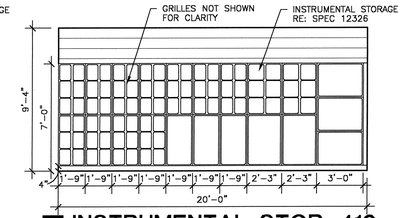

7 INSTRUMENTAL STOR. 410
SCALE: 1/4" = 1'-0"

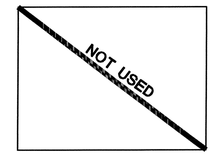

8 NOT USED
SCALE: 1/4" = 1'-0"

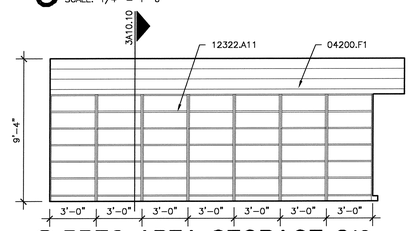

9 BREC AREA STORAGE 316
SCALE: 1/4" = 1'-0"

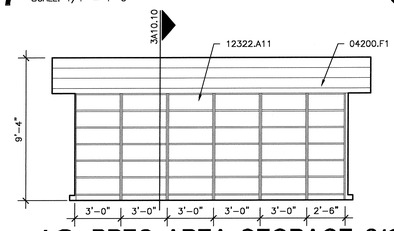

10 BREC AREA STORAGE 316
SCALE: 1/4" = 1'-0"

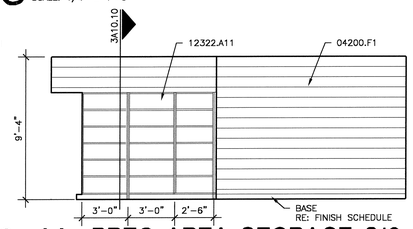

11 BREC AREA STORAGE 316
SCALE: 1/4" = 1'-0"

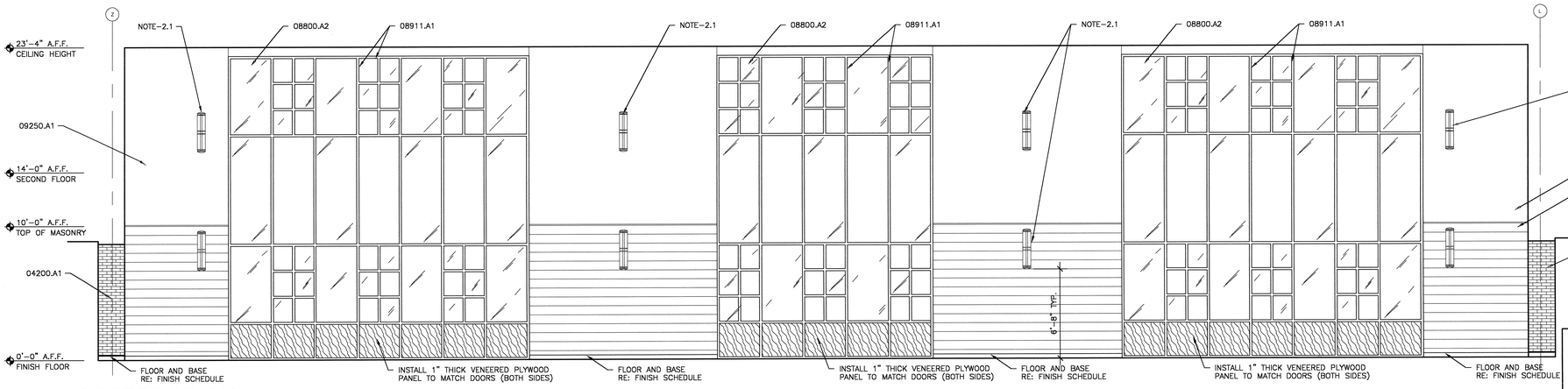

4 CORRIDOR 010
SCALE: 1/4" = 1'-0"

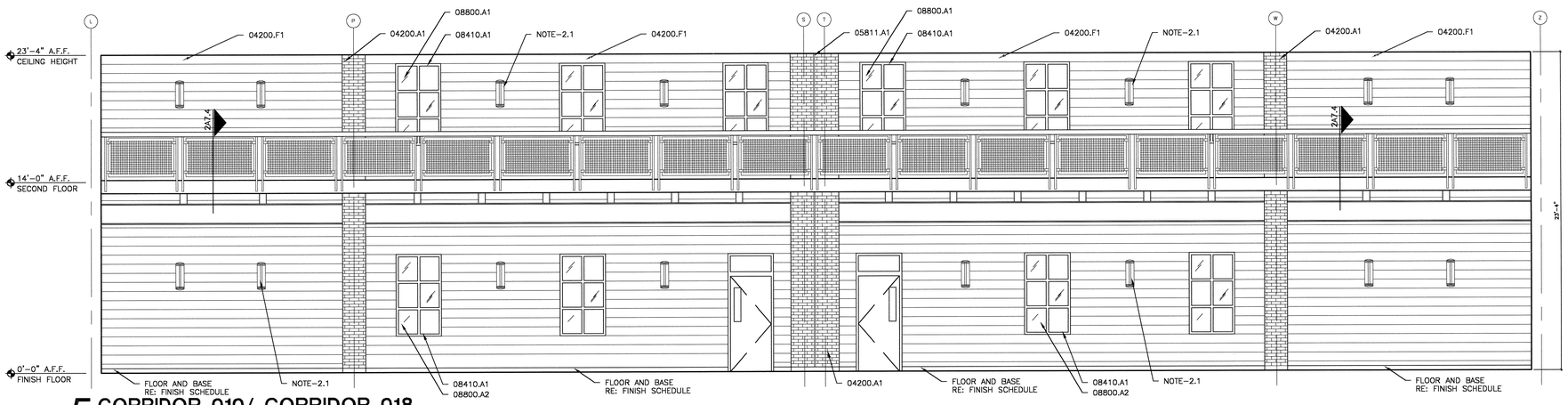

5 CORRIDOR 010/ CORRIDOR 018
SCALE: 1/4" = 1'-0"

KEY PLAN

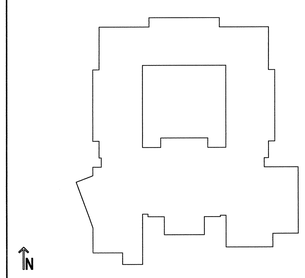

NOTES:

1. PROVIDE WALL COVER FILLER STRIPS AS REQUIRED ON ALL MILLWORK. RE: SPECIFICATIONS.

KEYNOTES

04200.A1	4" VENEER FACE BRICK RE: ELEVATIONS AND DETAILS FOR LOCATIONS OF ACCENT COLORS OF BRICK
04200.F1	8 X 8 X 16 CONCRETE MASONRY UNITS
04200.F2	CONCRETE MASONRY U-BLOCK CONCRETE FILLED WITH 2- #5 REBAR CONT.
05811.A1	EXPASION JOINT COVER - WALL
08410.A1	ALUMINUM STOREFRONT FRAMING (EXTERIOR WINDOWS)
08800.A1	1/4" TINTED AND HEAT TREATED FLOAT GLASS
08800.A2	1/4" TEMPERED GLASS - INTERIOR GLAZING
08911.A1	ALUMINUM CURTAIN WALLS
09250.A1	5/8" GYPSUM BOARD
10100.C2	TACKBOARD (4'H X 8'W)
10505.A1	CORRIDOR LOCKER - TYPE I DBL. TIER WITH SLOPED TOP
12322.A11	ALL OPEN STORAGE SHELVING W/ ADJUSTABLE SHELVES AND ONE FIXED. 18" DEEP x 84" HIGH RE: ELEVATION FOR WIDTH
NOTE-2.1	LIGHT FIXTURE RE: ELECTRICAL

USE OF ARCHITECT'S DRAWINGS, SPECIFICATIONS AND OTHER DOCUMENTS

THE DRAWINGS, SPECIFICATIONS AND OTHER DOCUMENTS PREPARED BY THE ARCHITECT FOR THIS PROJECT ARE INSTRUMENTS OF THE ARCHITECT'S SERVICE FOR USE SOLELY WITH RESPECT TO THIS PROJECT AND, UNLESS OTHERWISE PROVIDED, THE ARCHITECT SHALL BE DEEMED THE AUTHOR OF THESE DOCUMENTS AND SHALL RETAIN ALL COMMON LAW, STATUTORY AND OTHER RESERVED RIGHTS, INCLUDING REPRODUCIBLE COPIES, OF THE ARCHITECT'S DRAWINGS, SPECIFICATIONS AND OTHER DOCUMENTS FOR INFORMATION AND REFERENCE IN CONNECTION WITH THE OWNER'S USE AND OCCUPANCY OF THE PROJECT. THE ARCHITECT'S DRAWINGS, SPECIFICATIONS OR OTHER DOCUMENTS SHALL NOT BE USED BY THE OWNER OR OTHERS ON OTHER PROJECTS, FOR ADDITIONS TO THIS PROJECT OR FOR COMPLETION OF THIS PROJECT BY OTHERS, UNLESS THE ARCHITECT IS ADJUDGED TO BE IN DEFAULT UNDER THIS AGREEMENT, EXCEPT BY AGREEMENT IN WRITING AND WITH APPROPRIATE COMPENSATION TO THE ARCHITECT.

NO.	DATE	REVISION/SUBMISSION
1	11/12/04	FIRE MARSHAL AND C.P. REVISIONS

McKINLEY MIDDLE MAGNET SCHOOL

1550 EDDIE ROBINSON SR. DRIVE
BATON ROUGE, LOUISIANA 70802

Robert M. Coleman & Partners Architects A.I.A.
3377 North Boulevard
Baton Rouge, Louisiana
70808
U.S.A.
tel 225.387.4414
fax 225.387.4693

INTERIOR ELEVATIONS

PROJECT NO. 03048	SHEET NO.. A10.4
DRAWN BY CS, BH, JM	
CHECKED BY JS	
DATE October 15, 2004	OF

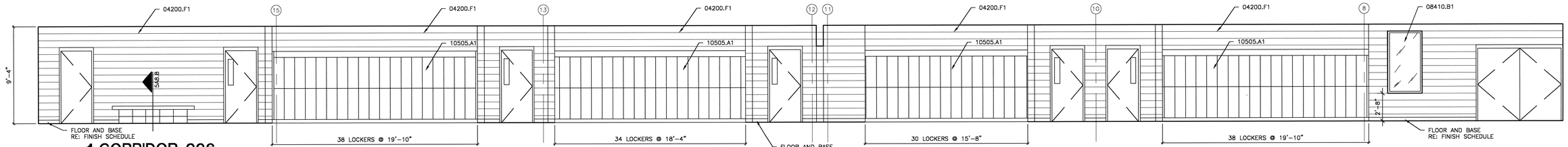

1 CORRIDOR 006
SCALE: 1/4" = 1'-0"

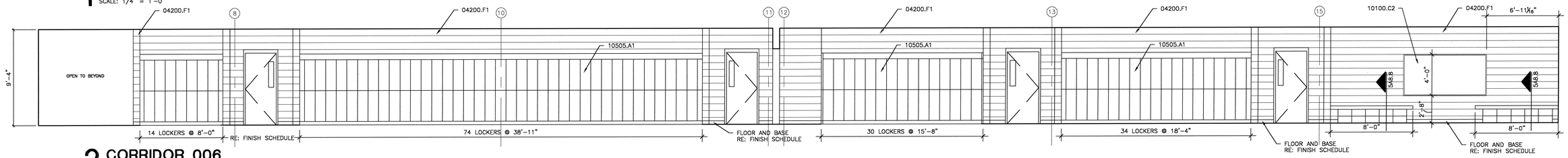

2 CORRIDOR 006
SCALE: 1/4" = 1'-0"

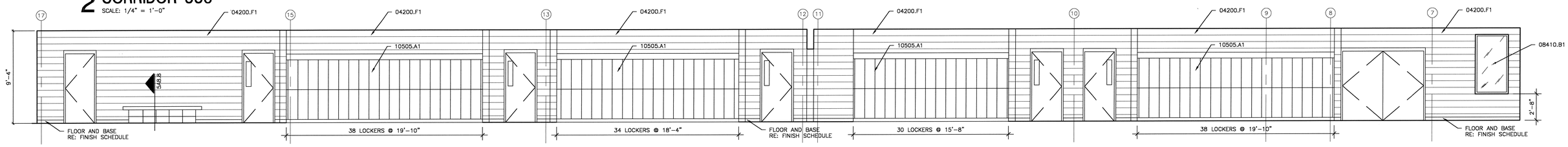

3 CORRIDOR 016 AND CORRIDOR 014 (O.H.)
SCALE: 1/4" = 1'-0"

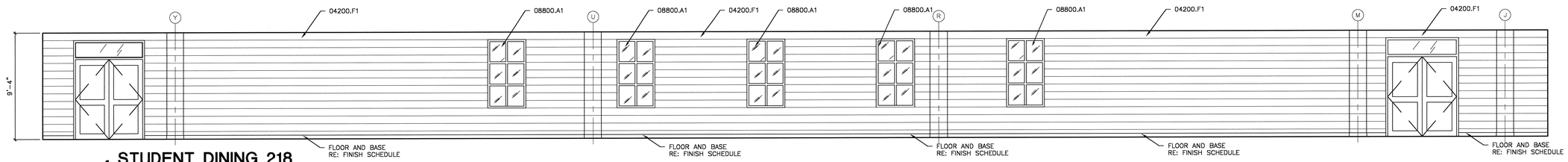

4 STUDENT DINING 218
SCALE: 1/4" = 1'-0"

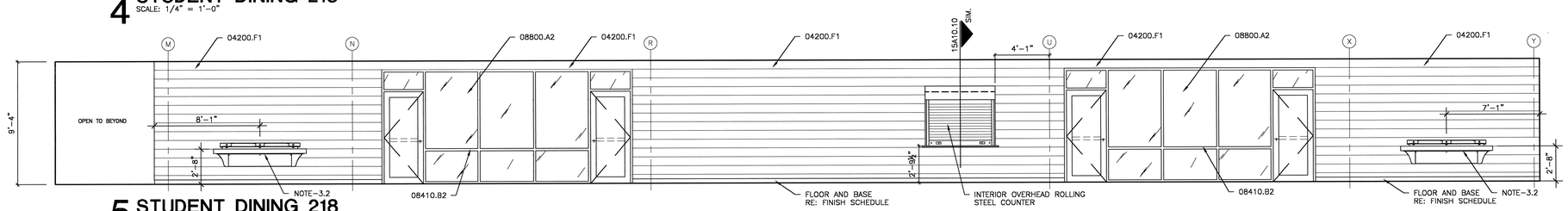

5 STUDENT DINING 218
SCALE: 1/4" = 1'-0"

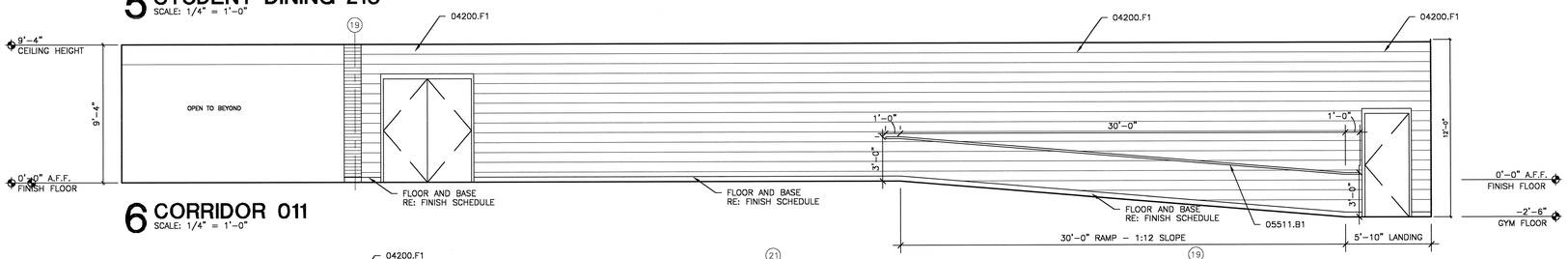

6 CORRIDOR 011
SCALE: 1/4" = 1'-0"

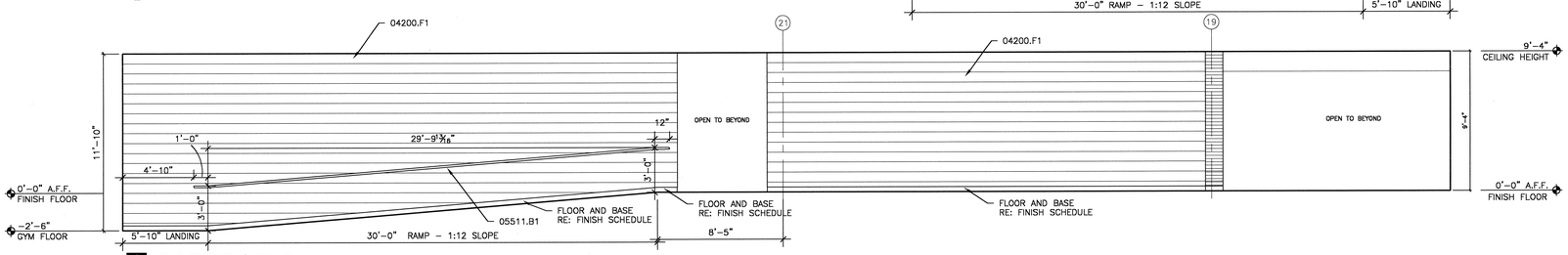

7 CORRIDOR 011
SCALE: 1/4" = 1'-0"

KEY PLAN

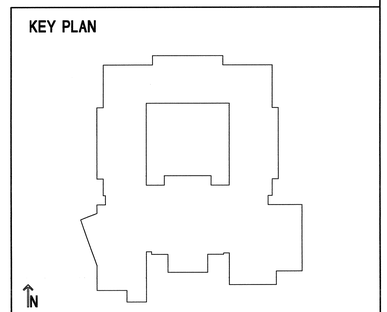

USE OF ARCHITECT'S DRAWINGS, SPECIFICATIONS AND OTHER DOCUMENTS

THE DRAWINGS, SPECIFICATIONS AND OTHER DOCUMENTS PREPARED BY THE ARCHITECT FOR THIS PROJECT ARE INSTRUMENTS OF THE ARCHITECT'S SERVICE FOR USE SOLELY WITH RESPECT TO THIS PROJECT AND, UNLESS OTHERWISE PROVIDED, THE ARCHITECT SHALL BE DEEMED THE AUTHOR OF THESE DOCUMENTS AND SHALL RETAIN ALL COMMON LAW, STATUTORY AND OTHER RESERVED RIGHTS, INCLUDING REPRODUCIBLE COPIES, OF THE ARCHITECT'S DRAWINGS, SPECIFICATIONS AND OTHER DOCUMENTS FOR INFORMATION AND REFERENCE IN CONNECTION WITH THE OWNER'S USE AND OCCUPANCY OF THE PROJECT. THE ARCHITECT'S DRAWINGS, SPECIFICATIONS OR OTHER DOCUMENTS SHALL NOT BE USED BY THE OWNER OR OTHERS ON OTHER PROJECTS, FOR ADDITIONS TO THIS PROJECT OR FOR COMPLETION OF THIS PROJECT BY OTHERS, UNLESS THE ARCHITECT IS ADJUDGED TO BE IN DEFAULT UNDER THIS AGREEMENT, EXCEPT BY AGREEMENT IN WRITING AND WITH APPROPRIATE COMPENSATION TO THE ARCHITECT.

KEYNOTES

04200.F1	8 X 8 X 16 CONCRETE MASONRY UNITS
05511.B1	1 1/2" O.D. STEEL HANDRAIL WALL MOUNTED
08410.B1	ALUMINUM STOREFRONT FRAMING (INTERIOR)
08410.B2	ALUMINUM STOREFRONT ENTRANCE DOORS & FRAME (INTERIOR)
08800.A1	1/4" TINTED AND HEAT TREATED FLOAT GLASS
08800.A2	1/4" TEMPERED GLASS - INTERIOR GLAZING
10100.C2	TACKBOARD (4'H X 8'W)
10505.A1	CORRIDOR LOCKER - TYPE I DBL. TIER (12"X15"X36") WITH SLOPED TOP
NOTE-3.2	LAVATORY RE: PLUMBING

NO.	DATE	REVISION/SUBMISSION
1	11/12/04	FIRE MARSHAL AND C.P. REVISIONS

McKINLEY MIDDLE MAGNET SCHOOL

1550 EDDIE ROBINSON SR. DRIVE
BATON ROUGE, LOUISIANA 70802

Robert M. Coleman & Partners Architects A.I.A.
3377 North Boulevard
Baton Rouge, Louisiana 70806 U.S.A.
tel 225.387.4414
fax 225.387.4693

INTERIOR ELEVATIONS

PROJECT NO. 03048	SHEET NO.. A10.5
DRAWN BY CS, BH, JM	
CHECKED BY JS	
DATE October 15, 2004	_____ OF _____

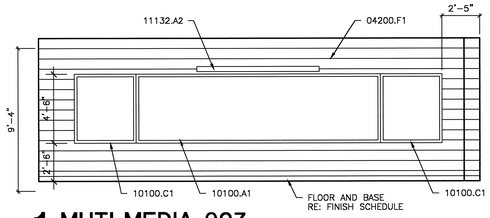

1 MUTI-MEDIA 907
SCALE: 1/4" = 1'-0"

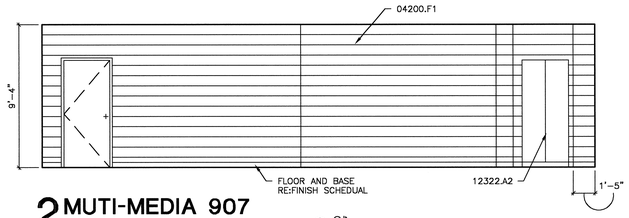

2 MUTI-MEDIA 907
SCALE: 1/4" = 1'-0"

3 NOT USED
SCALE: 1/4" = 1'-0"

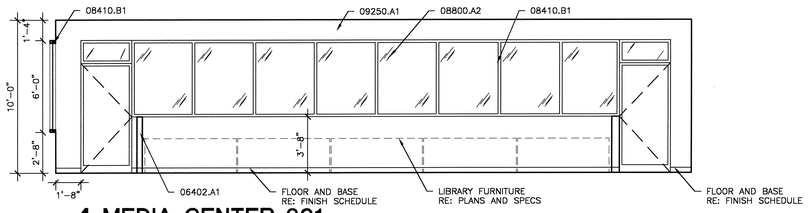

4 MEDIA CENTER 901
SCALE: 1/4" = 1'-0"

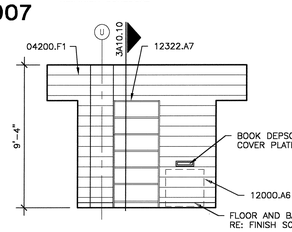

5 BOOK STORAGE 909
SCALE: 1/4" = 1'-0"

NOTE: PROVIDE OPENING IN CMU WALL FOR INSTALLATION OF BOOK DEPOSIT RE: MANUFACTURER'S RECOMMENDATION.

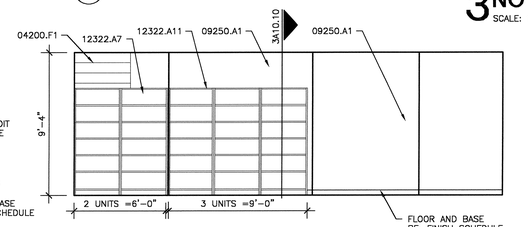

6 BOOK STORAGE 909
SCALE: 1/4" = 1'-0"

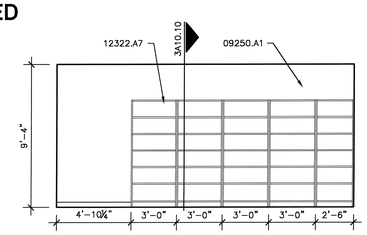

7 BOOK STORAGE 909
SCALE: 1/4" = 1'-0"

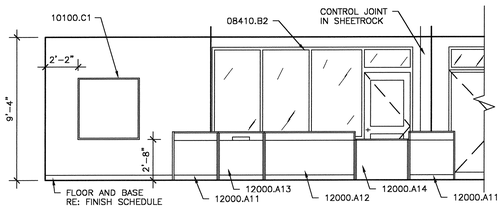

8 CIRCULATION DESK 901
SCALE: 1/4" = 1'-0"

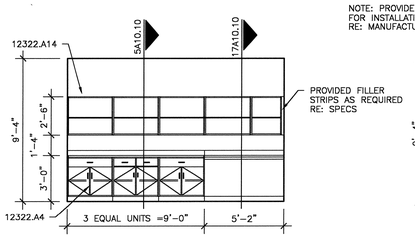

9 WORK ROOM 903
SCALE: 1/4" = 1'-0"

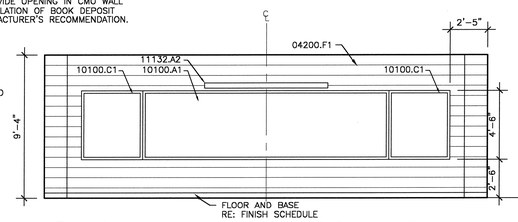

10 COMPUTER CLASSROOM/LAB 904
SCALE: 1/4" = 1'-0"

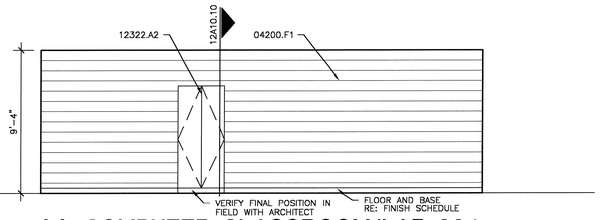

11 COMPUTER CLASSROOM/LAB 904
SCALE: 1/4" = 1'-0"

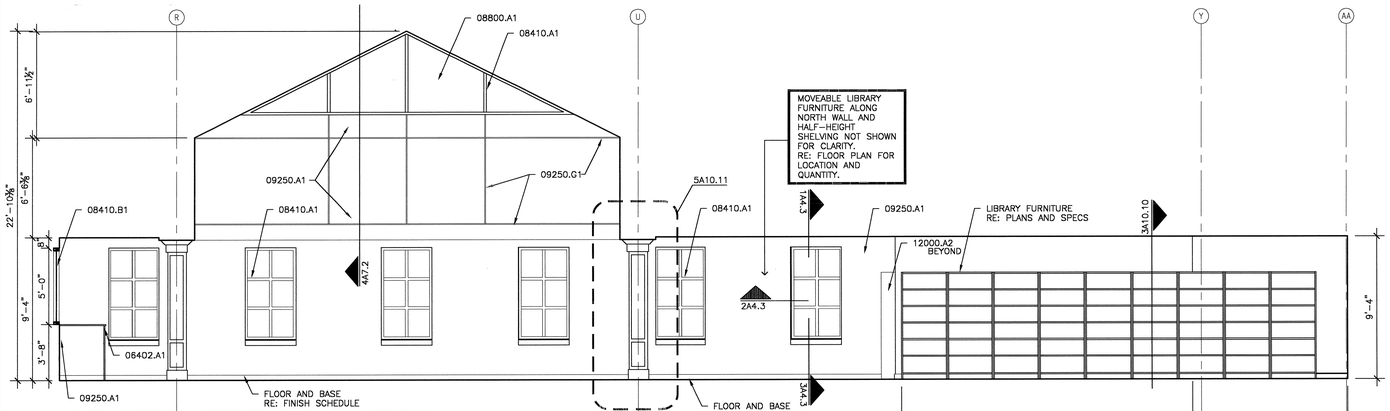

MOVEABLE LIBRARY FURNITURE ALONG NORTH WALL AND HALF-HEIGHT SHELVING NOT SHOWN FOR CLARITY. RE: FLOOR PLAN FOR LOCATION AND QUANTITY.

12 MEDIA CENTER ELEVATION
SCALE: 1/4" = 1'-0"

13 NOT USED
SCALE: 1/4" = 1'-0"

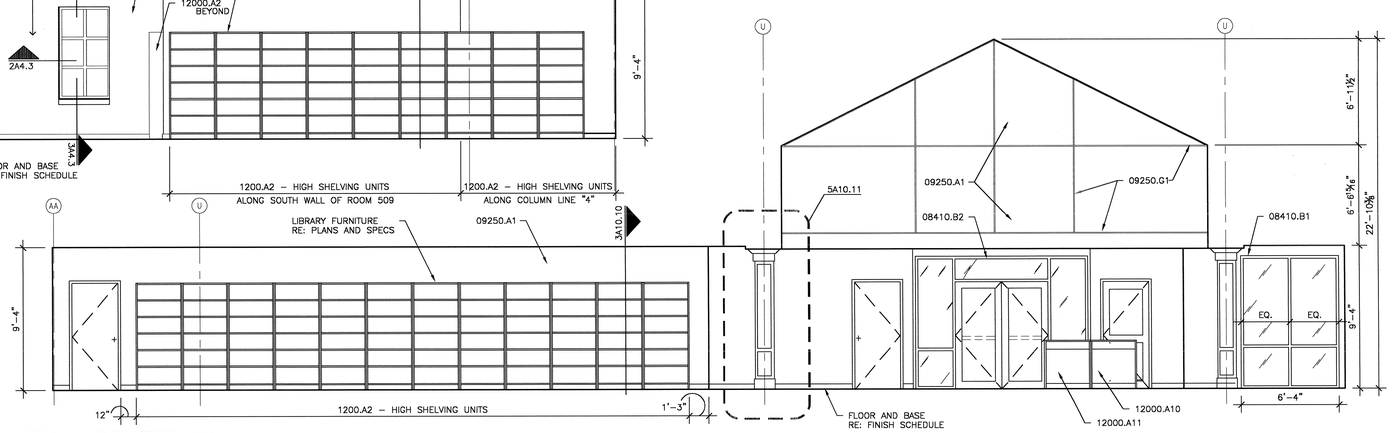

14 MEDIA CENTER 901
SCALE: 1/4" = 1'-0"

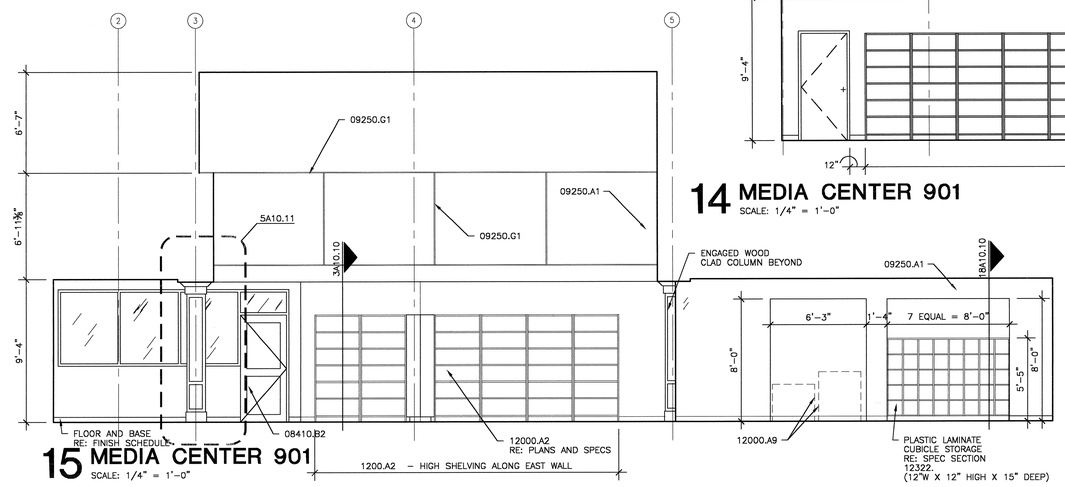

15 MEDIA CENTER 901
SCALE: 1/4" = 1'-0"

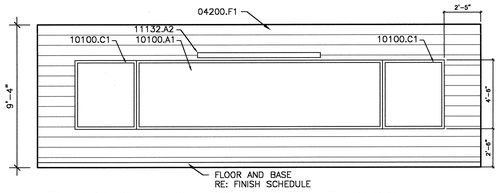

16 EDUCATION/COMP. LAB 900
SCALE: 1/4" = 1'-0"

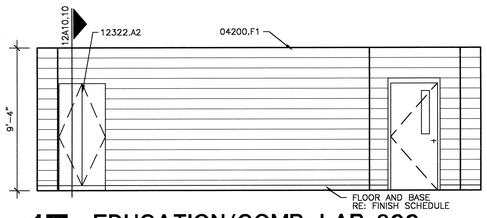

17 EDUCATION/COMP. LAB 900
SCALE: 1/4" = 1'-0"

MATERIAL KEYNOTES

04200.F1	8 X 8 X 16 CONCRETE MASONRY UNITS
06402.A1	1x WOOD TRIM
08410.A1	ALUMINUM STOREFRONT FRAMING (EXTERIOR WINDOWS)
08410.B1	ALUMINUM STOREFRONT FRAMING (INTERIOR)
08410.B2	ALUMINUM STOREFRONT ENTRANCE DOORS & FRAME (INTERIOR)
08800.A1	1/4" TINTED AND HEAT TREATED FLOAT GLASS
08800.A2	1/4" TEMPERED GLASS – INTERIOR GLAZING
09250.A1	5/8" GYPSUM BOARD
09250.G1	EXTRUDED ALUMINUM DRYWALL REVEAL 3/4" – TYPE F" REVEAL
10100.A1	WHITE MARKER BOARD (DRY-ERASE) (4'H X 16'W)
10100.C1	TACKBOARD (4'H X 4'W)
11132.A2	MANUALLY OPERATED, WALL MOUNTED PROJECTION SCREEN (8' W X 8' H)
12000.A10	LIBRARY FURNITURE – CIRCULATION DESK CABINET UNIT W/ HINGED DOORS AND DRAWERS 36"W x 30"D x 38"H
12000.A11	LIBRARY FURNITURE – CIRCULATION DESK CLOSED TRIANGULAR CORNER UNIT 30"D x 38"H
12000.A12	LIBRARY FURNITURE – CIRCULATION DESK COMPUTER CENTER W/ HORIZONTAL CPU PEDESTAL/ PRINTER SHELF 72"W x 30"d x 38"H
12000.A13	LIBRARY FURNITURE – CIRCULATION DESK BOOK RETURN UNIT 36"W x 30"D x 38"H
12000.A14	LIBRARY FURNITURE – CIRCULATION DESK FRONT ACCESS DESK FOR ADA 42"W x 30"D x 32"W
12000.A2	LIBRARY FURNITURE – HIGH SHELVING UNIT
12000.A6	LIBRARY FURNITURE – DEPRESSIBLE BOOK TRUCK
12000.A9	LIBRARY FURNITURE – COMPUTER STATION
12322.A11	ALL OPEN STORAGE SHELVING W/ ADJUSTABLE SHELVES AND ONE FIXED, 18" DEEP x 84" HIGH RE: ELEVATION FOR WIDTH
12322.A14	PLASTIC LAMINATED FACE CASEWORK – OPEN STORAGE UPPER CABINET
12322.A2	PLASTIC LAMINATED FACE CASEWORK WARDROBE CABINET
12322.A4	PLASTIC LAMINATED FACE CASEWORK BASE CABINET
12322.A7	OPEN STORAGE SHELVING WITH 4 ADJUSTABLE SHELVES AND ONE FIXED, WIDTH INDICATED ON DRAWINGS, 24" DEEP BY 84" HIGH

KEY PLAN

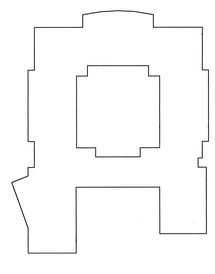

USE OF ARCHITECT'S DRAWINGS, SPECIFICATIONS AND OTHER DOCUMENTS

THE DRAWINGS, SPECIFICATIONS AND OTHER DOCUMENTS PREPARED BY THE ARCHITECT FOR THIS PROJECT ARE INSTRUMENTS OF THE ARCHITECT'S SERVICE FOR USE SOLELY WITH RESPECT TO THIS PROJECT AND, UNLESS OTHERWISE PROVIDED, THE ARCHITECT SHALL BE DEEMED THE AUTHOR OF THESE DOCUMENTS AND SHALL RETAIN ALL COMMON LAW, STATUTORY AND OTHER RESERVED RIGHTS, INCLUDING REPRODUCIBLE COPIES, OF THE ARCHITECT'S DRAWINGS, SPECIFICATIONS AND OTHER DOCUMENTS FOR INFORMATION AND REFERENCE IN CONNECTION WITH THE OWNER'S USE AND OCCUPANCY OF THE PROJECT. THE ARCHITECT'S DRAWINGS, SPECIFICATIONS OR OTHER DOCUMENTS SHALL NOT BE USED BY THE OWNER OR OTHERS ON OTHER PROJECTS, FOR ADDITIONS TO THIS PROJECT OR FOR COMPLETION OF THIS PROJECT BY OTHERS, UNLESS THE ARCHITECT IS ADJUDGED TO BE IN DEFAULT UNDER THIS AGREEMENT, EXCEPT BY AGREEMENT IN WRITING AND WITH APPROPRIATE COMPENSATION TO THE ARCHITECT.

NO.	DATE	REVISION/SUBMISSION
1	11/12/04	FIRE MARSHAL AND C.P. REVISIONS

McKINLEY MIDDLE MAGNET SCHOOL

1550 EDDIE ROBINSON SR. DRIVE
BATON ROUGE, LOUISIANA 70802

Robert M. Coleman & Partners Architects A.I.A.
3377 North Boulevard
Baton Rouge, Louisiana 70806
U.S.A.
tel 225.387.4414
fax 225.387.4693

INTERIOR ELEVATIONS

PROJECT NO. 0304B	SHEET NO.. A10.6
DRAWN BY CS, BH	
CHECKED BY JS	
DATE October 15, 2004	____ OF ____

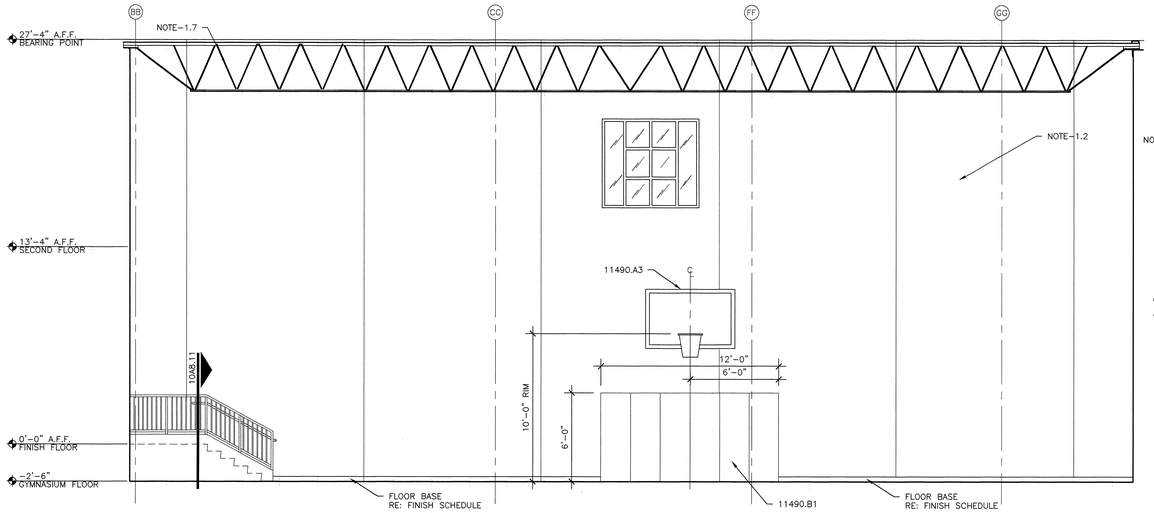

1 GYMNASIUM ELEVATION
SCALE: 1/4" = 1'-0"

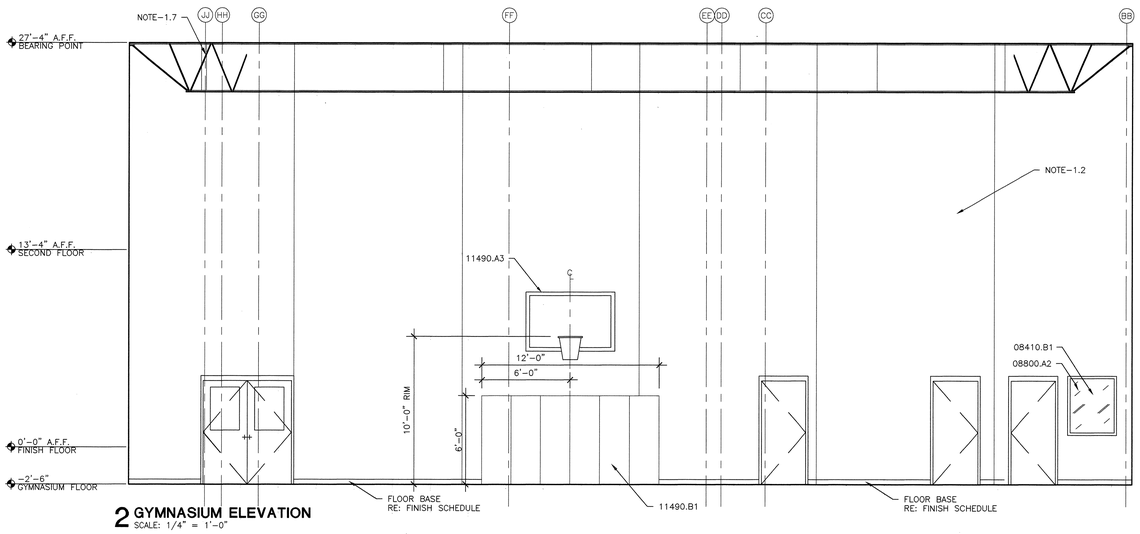

2 GYMNASIUM ELEVATION
SCALE: 1/4" = 1'-0"

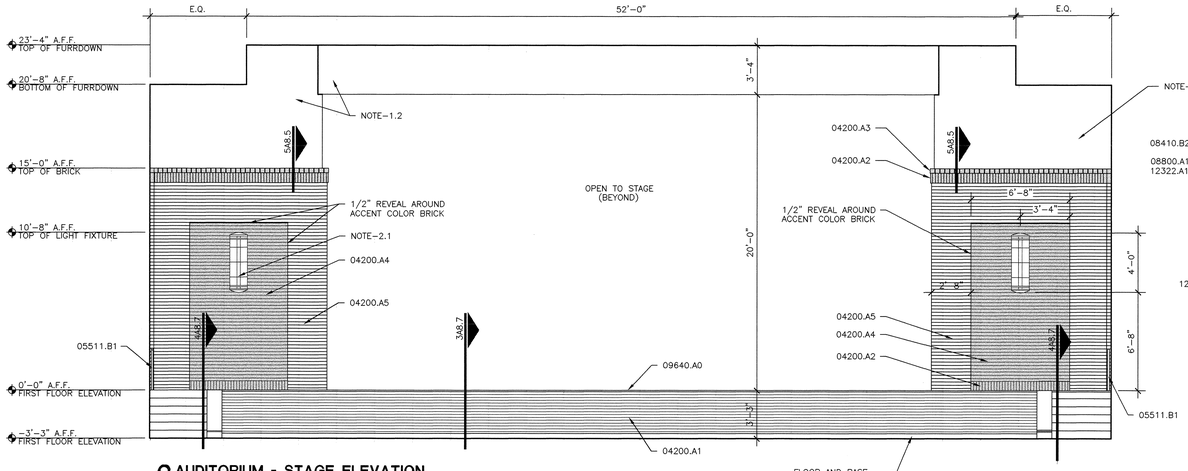

3 AUDITORIUM - STAGE ELEVATION
SCALE: 1/4" = 1'-0"

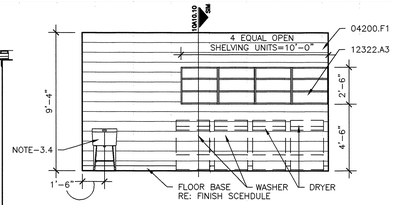

4 LAUNDRY ROOM 315
SCALE: 1/4" = 1'-0"

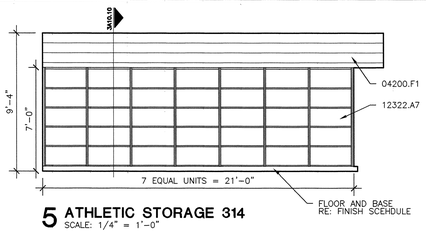

5 ATHLETIC STORAGE 314
SCALE: 1/4" = 1'-0"

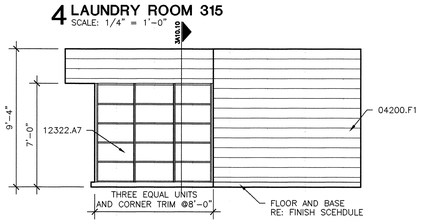

6 ATHLETIC STORAGE 314
SCALE: 1/4" = 1'-0"

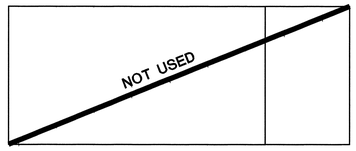

7 ATHLETIC STORAGE 314
SCALE: 1/4" = 1'-0"

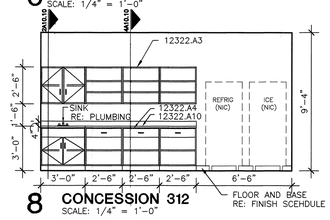

8 CONCESSION 312
SCALE: 1/4" = 1'-0"

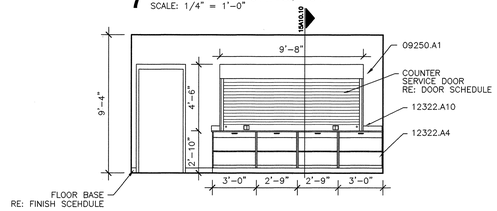

9 CONCESSION 312
SCALE: 1/4" = 1'-0"

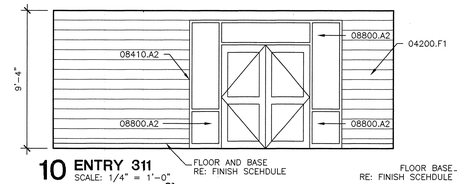

10 ENTRY 311
SCALE: 1/4" = 1'-0"

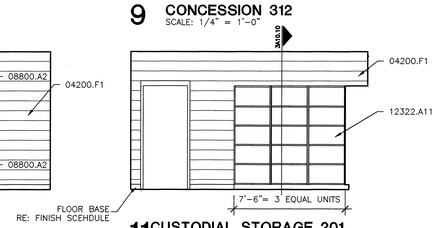

11 CUSTODIAL STORAGE 201
SCALE: 1/4" = 1'-0"

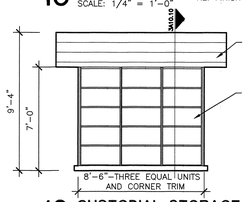

12 CUSTODIAL STORAGE 201
SCALE: 1/4" = 1'-0"

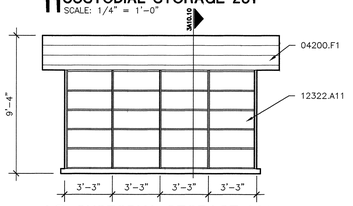

13 CUSTODIAL STORAGE 201
SCALE: 1/4" = 1'-0"

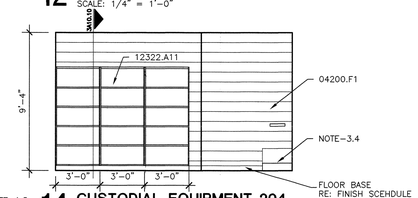

14 CUSTODIAL EQUIPMENT 204
SCALE: 1/4" = 1'-0"

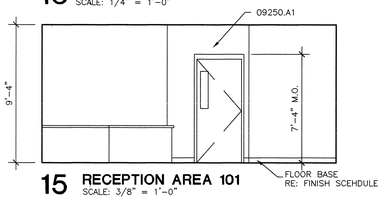

15 RECEPTION AREA 101
SCALE: 3/8" = 1'-0"

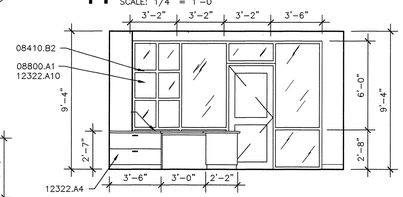

16 GUIDANCE RECEPTION 125
SCALE: 3/8" = 1'-0"

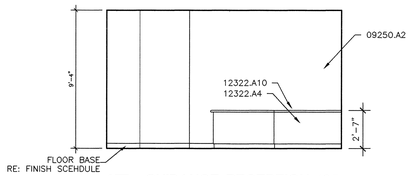

17 GUIDANCE RECEPTION 125
SCALE: 3/8" = 1'-0"

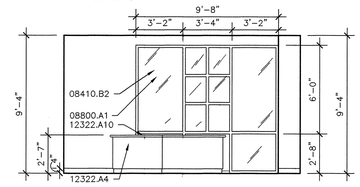

18 GUIDANCE RECEPTION 125
SCALE: 3/8" = 1'-0"

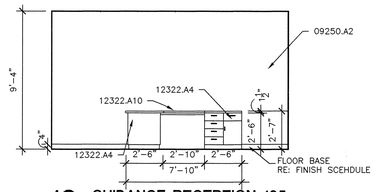

19 GUIDANCE RECEPTION 125
SCALE: 3/8" = 1'-0"

MATERIAL KEYNOTES

04200.A1	4" VENEER FACE BRICK RE: ELEVATIONS AND DETAILS FOR LOCATIONS OF ACCENT COLORS OF BRICK
04200.A2	SOLDIER COURSE
04200.A3	ROWLOCK COURSE
04200.A4	4" FACE BRICK – ACCENT COLOR
04200.A5	4" FACE BRICK – FIELD COLOR
04200.F1	8 X 8 X 16 CONCRETE MASONRY UNITS
05511.B1	1 1/2" O.D. STEEL HANDRAIL WALL MOUNTED
08410.A2	ALUMINUM STOREFRONT ENTRANCE DOORS & FRAME (EXTERIOR)
08410.B1	ALUMINUM STOREFRONT FRAMING (INTERIOR)
08410.B2	ALUMINUM STOREFRONT ENTRANCE DOORS & FRAME (INTERIOR)
08800.A1	1/4" TINTED AND HEAT TREATED FLOAT GLASS
08800.A2	1/4" TEMPERED GLASS – INTERIOR GLAZING
09250.A1	5/8" GYPSUM BOARD
09250.A2	5/8" IMPACT RESISTANT GYPSUM BOARD
09640.A0	WOOD FLOORING – STAGE
11490.A3	BASKETBALL GOAL (TEMPERED GLASS)
11490.B1	WALL SAFETY PAD
12322.A3	PLASTIC LAMINATED FACE CASEWORK UPPER CABINET
12322.A4	PLASTIC LAMINATED FACE CASEWORK BASE CABINET
12322.A7	OPEN STORAGE SHELVING WITH 4 ADJUSTABLE SHELVES AND ONE FIXED, WIDTH INDICATED ON DRAWINGS, 24" DEEP BY 84" HIGH
12322.A10	PLASTIC LAMINATE COUNTERTOP
12322.A11	ALL OPEN STORAGE SHELVING W/ ADJUSTABLE SHELVES AND ONE FIXED. 18" DEEP x 84" HIGH RE: ELEVATION FOR WIDTH
NOTE-1.2	PRECAST CONCRETE PANEL RE: STRUCTURAL
NOTE-1.7	STEEL JOIST RE: STRUCTURAL
NOTE-2.1	LIGHT FIXTURE RE: ELECTRICAL
NOTE-3.4	MOP SINK RE: PLUMBING

LEGEND:

ACCENT COLOR BRICK TO BE PICKED BY ARCHITECT

FIELD COLOR BRICK TO BE PICKED BY ARCHITECT

KEY PLAN

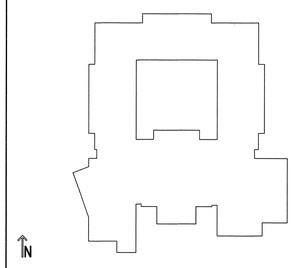

USE OF ARCHITECT'S DRAWINGS, SPECIFICATIONS AND OTHER DOCUMENTS

THE DRAWINGS, SPECIFICATIONS AND OTHER DOCUMENTS PREPARED BY THE ARCHITECT FOR THIS PROJECT ARE INSTRUMENTS OF THE ARCHITECT'S SERVICE FOR USE SOLELY WITH RESPECT TO THIS PROJECT AND, UNLESS OTHERWISE PROVIDED, THE ARCHITECT SHALL BE DEEMED THE AUTHOR OF THESE DOCUMENTS AND SHALL RETAIN ALL COMMON LAW, STATUTORY AND OTHER RESERVED RIGHTS, INCLUDING REPRODUCIBLE COPIES, OF THE ARCHITECT'S DRAWINGS, SPECIFICATIONS AND OTHER DOCUMENTS FOR INFORMATION AND REFERENCE IN CONNECTION WITH THE OWNER'S USE AND OCCUPANCY OF THE PROJECT. THE ARCHITECT'S DRAWINGS, SPECIFICATIONS OR OTHER DOCUMENTS SHALL NOT BE USED BY THE OWNER OR OTHERS ON OTHER PROJECTS, FOR ADDITIONS TO THIS PROJECT OR FOR COMPLETION OF THIS PROJECT BY OTHERS, UNLESS THE ARCHITECT IS ADJUDGED TO BE IN DEFAULT UNDER THIS AGREEMENT, EXCEPT BY AGREEMENT IN WRITING AND WITH APPROPRIATE COMPENSATION TO THE ARCHITECT.

NO.	DATE	REVISION/SUBMISSION
1	11/12/04	FIRE MARSHAL AND C.P. REVISIONS

McKINLEY MIDDLE MAGNET SCHOOL

1550 EDDIE ROBINSON SR. DRIVE
BATON ROUGE, LOUISIANA 70802

Robert M. Coleman & Partners Architects A.I.A.
3377 North Boulevard
Baton Rouge, Louisiana 70806 U.S.A.
tel 225.387.4414
fax 225.387.4663

INTERIOR ELEVATIONS

PROJECT NO. 03048	SHEET NO.. A10.7
DRAWN BY CS, BH, JM	
CHECKED BY JS	
DATE October 15, 2004	OF

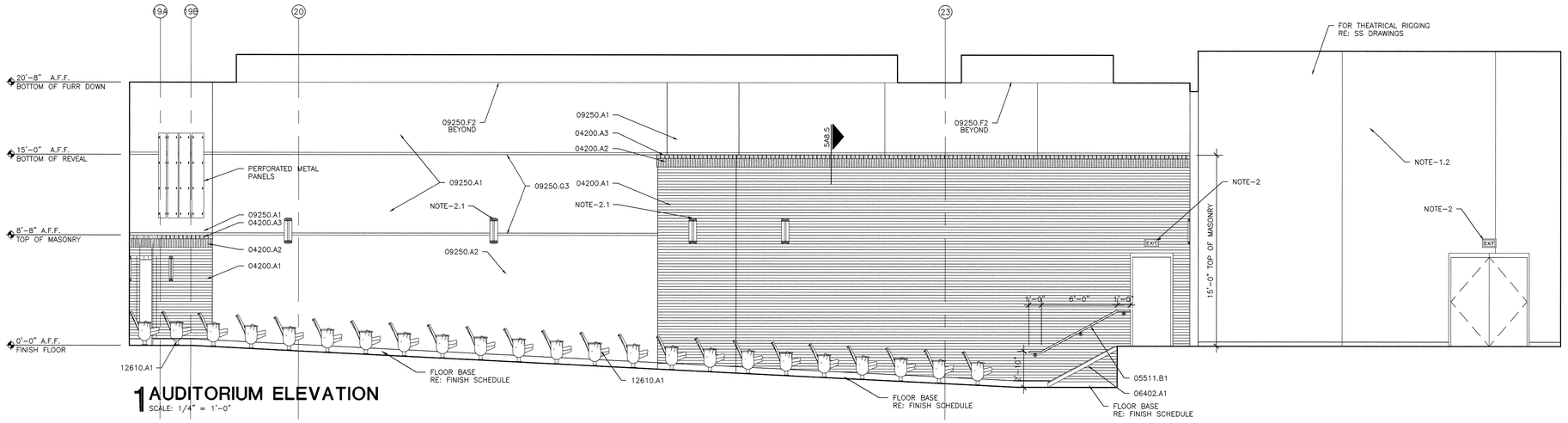

1 AUDITORIUM ELEVATION

SCALE: 1/4" = 1'-0"

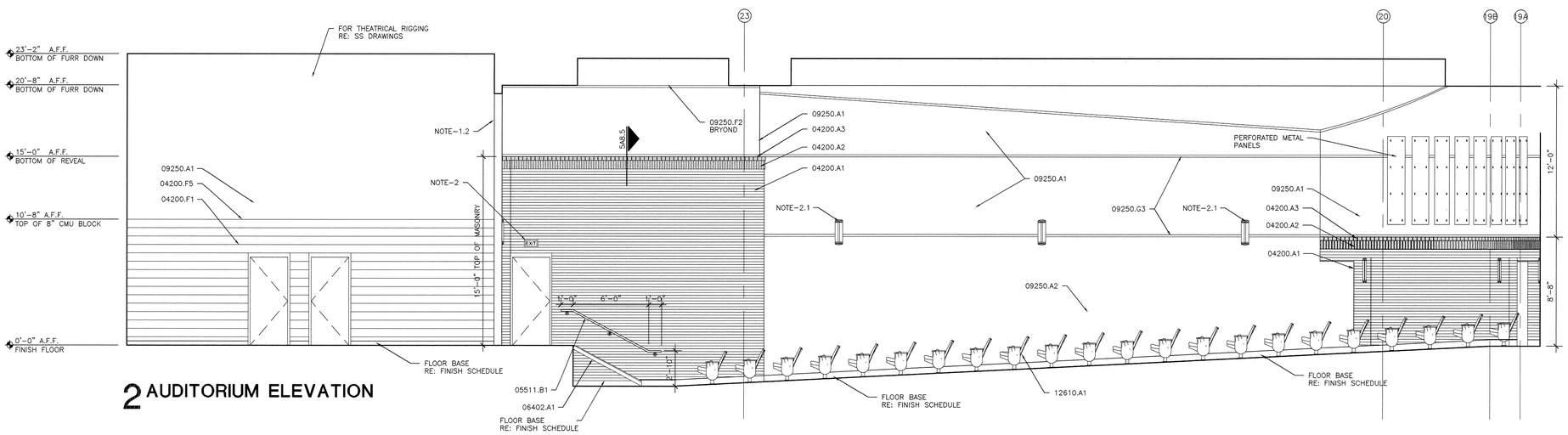

2 AUDITORIUM ELEVATION

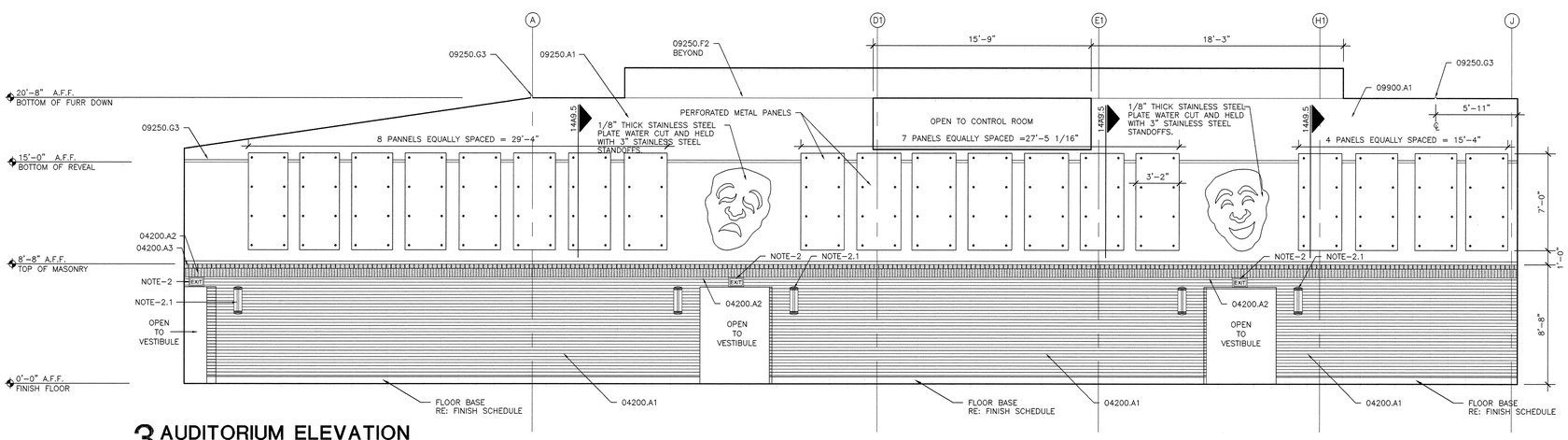

3 AUDITORIUM ELEVATION

SCALE: 1/4" = 1'-0"

NOTE: GROUPS OF PANELS ARE TO BE CENTER IN-BETWEEN POERTALS LEADING TO THE LOBBY.

0 8" 1'-4" 2'-8"

SCALE: 1/4" = 1'-0"

MATERIAL KEYNOTES

04200.A1	4" VENEER FACE BRICK RE: ELEVATIONS AND DETAILS FOR LOCATIONS OF ACCENT COLORS OF BRICK
04200.A2	SOLDIER COURSE
04200.A3	ROWLOCK COURSE
04200.F1	8 X 8 X 16 CONCRETE MASONRY UNITS
04200.F5	CONCRETE MASONRY U-BLOCK BOND BEAM CONCRETE FILLED WITH 2- #5 REBAR
05511.B1	1 1/2" O.D. STEEL HANDRAIL WALL MOUNTED
06402.A1	1x WOOD TRIM
09250.A1	5/8" GYPSUM BOARD
09250.A2	5/8" IMPACT RESISTANT GYPSUM BOARD
09250.F2	5/8" GYPSUM BOARD FURR-DOWN
09250.G3	EXTRUDED ALUMINUM DRYWALL REVEAL 2" - TYPE F" REVEAL
09900.A1	PAINT RE: FINISH SCHEDULE
12610.A1	FIXED AUDIENCE SEATING
NOTE-1.2	PRECAST CONCRETE PANEL RE: STRUCTURAL
NOTE-2	RE: ELECTRICAL
NOTE-2.1	LIGHT FIXTURE RE: ELECTRICAL

LEGEND:

ACCENT COLOR BRICK TO BE PICKED BY ARCHITECT

FIELD COLOR BRICK TO BE PICKED BY ARCHITECT

KEY PLAN

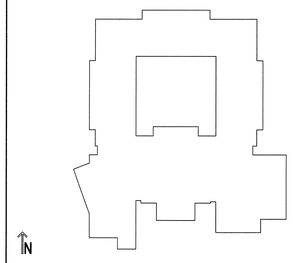

USE OF ARCHITECT'S DRAWINGS, SPECIFICATIONS AND OTHER DOCUMENTS

THE DRAWINGS, SPECIFICATIONS AND OTHER DOCUMENTS PREPARED BY THE ARCHITECT FOR THIS PROJECT ARE INSTRUMENTS OF THE ARCHITECT'S SERVICE FOR USE SOLELY WITH RESPECT TO THIS PROJECT AND, UNLESS OTHERWISE PROVIDED, THE ARCHITECT SHALL BE DEEMED THE AUTHOR OF THESE DOCUMENTS AND SHALL RETAIN ALL COMMON LAW, STATUTORY AND OTHER RESERVED RIGHTS, INCLUDING REPRODUCIBLE COPIES, OF THE ARCHITECT'S DRAWINGS, SPECIFICATIONS AND OTHER DOCUMENTS FOR INFORMATION AND REFERENCE IN CONNECTION WITH THE OWNER'S USE AND OCCUPANCY OF THE PROJECT. THE ARCHITECT'S DRAWINGS, SPECIFICATIONS OR OTHER DOCUMENTS SHALL NOT BE USED BY THE OWNER OR OTHERS ON OTHER PROJECTS, FOR ADDITIONS TO THIS PROJECT OR FOR COMPLETION OF THIS PROJECT BY OTHERS, UNLESS THE ARCHITECT IS ADJUDGED TO BE IN DEFAULT UNDER THIS AGREEMENT, EXCEPT BY AGREEMENT IN WRITING AND WITH APPROPRIATE COMPENSATION TO THE ARCHITECT.

NO.	DATE	REVISION/SUBMISSION
1	11/12/04	FIRE MARSHAL AND C.P. REVISIONS

McKINLEY MIDDLE MAGNET SCHOOL

1550 EDDIE ROBINSON SR. DRIVE
BATON ROUGE, LOUISIANA 70802

Robert M. Coleman & Partners Architects A.I.A.
3377 North Boulevard
Baton Rouge, Louisiana 70806
U.S.A.
tel 225.387.4414
fax 225.387.4693

INTERIOR ELEVATIONS

PROJECT NO. 03048	SHEET NO.. A10.8
DRAWN BY CS, BH, JM	
CHECKED BY JS	
DATE October 15, 2004	OF

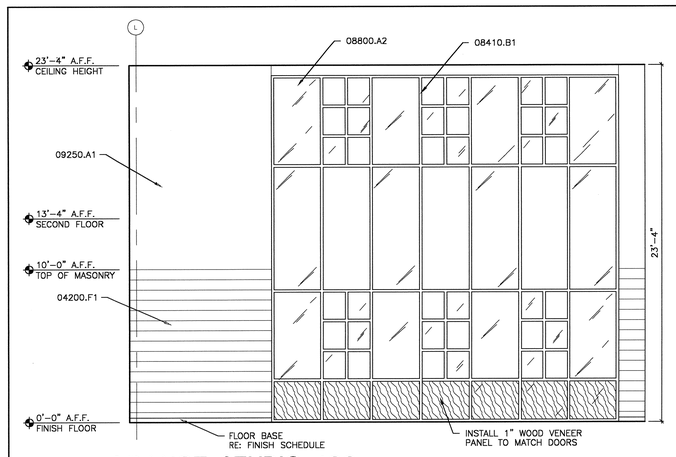

1 DANCE STUDIO 400
SCALE: 1/4" = 1'-0"

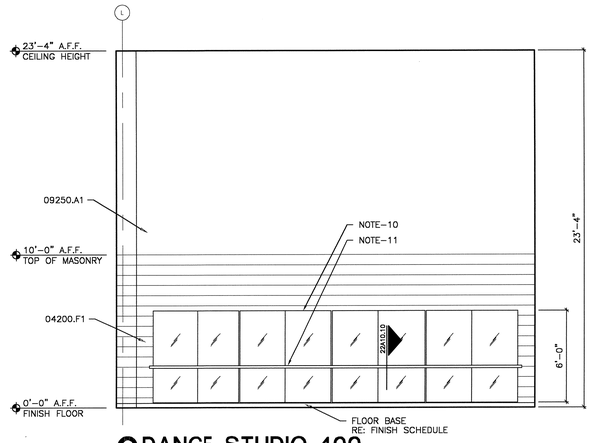

2 DANCE STUDIO 400
SCALE: 1/4" = 1'-0"

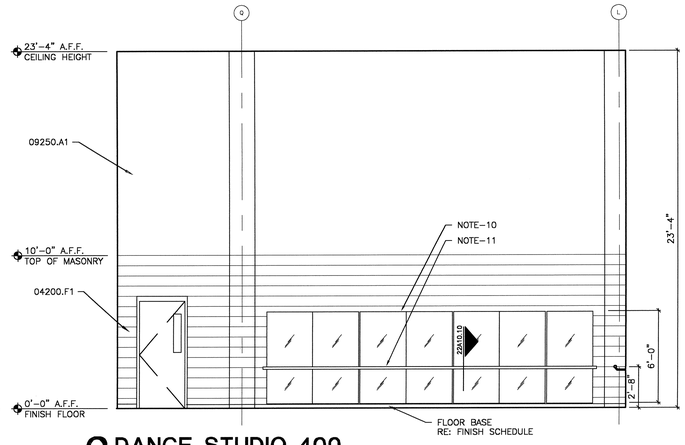

3 DANCE STUDIO 400
SCALE: 1/4" = 1'-0"

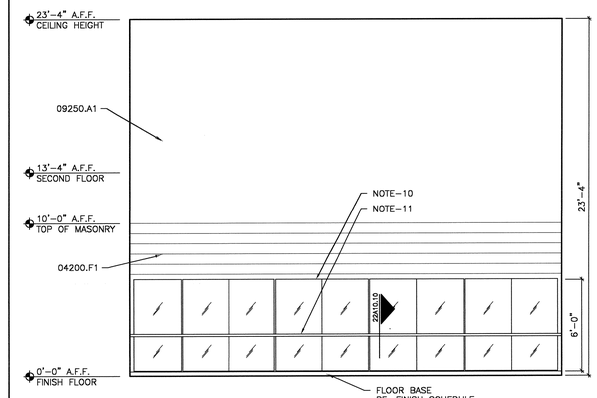

4 DANCE STUDIO 400
SCALE: 1/4" = 1'-0"

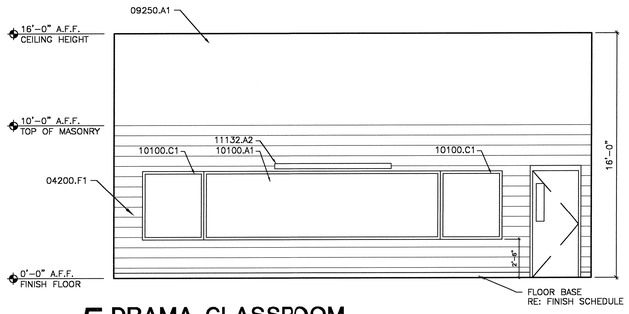

5 DRAMA CLASSROOM
SCALE: 1/4" = 1'-0"

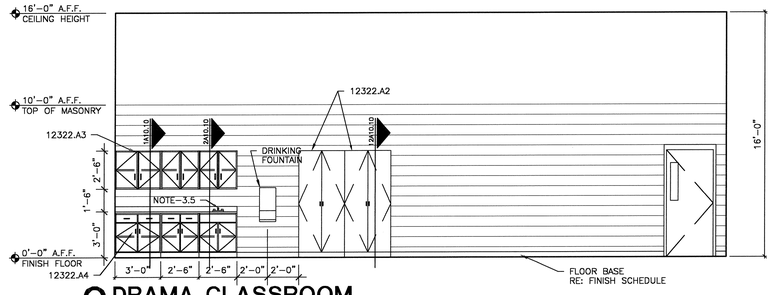

6 DRAMA CLASSROOM
SCALE: 1/4" = 1'-0"

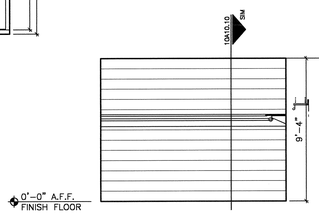

7 STORAGE 409
SCALE: 1/4" = 1'-0"

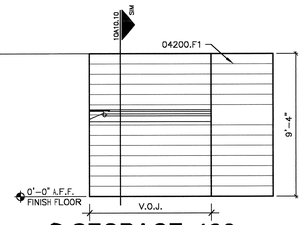

8 STORAGE 409
SCALE: 1/4" = 1'-0"

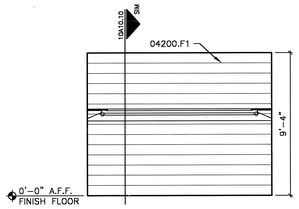

9 STORAGE 409
SCALE: 1/4" = 1'-0"

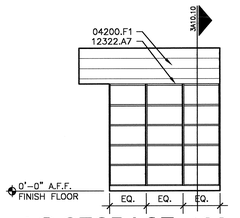

10 STORAGE 402
SCALE: 1/4" = 1'-0"

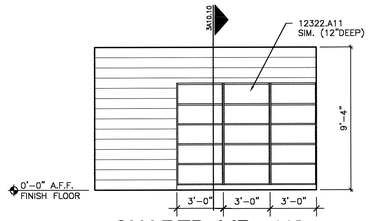

11 SHARED LIB. 412
SCALE: 1/4" = 1'-0"

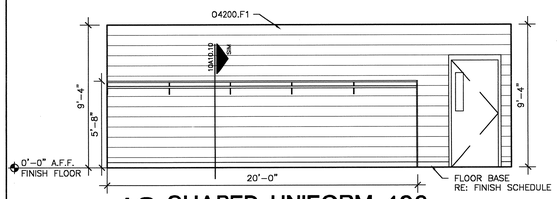

12 SHARED UNIFORM 406
SCALE: 1/4" = 1'-0"

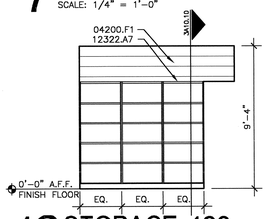

13 STORAGE 402
SCALE: 1/4" = 1'-0"

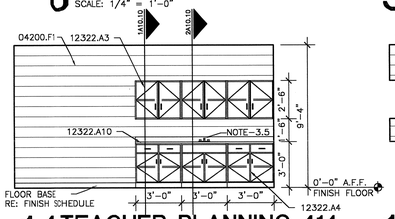

14 TEACHER PLANNING 414
SCALE: 1/4" = 1'-0"

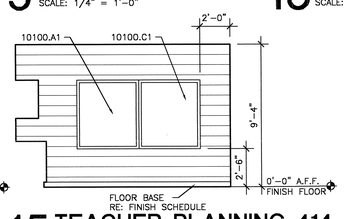

15 TEACHER PLANNING 414
SCALE: 1/4" = 1'-0"

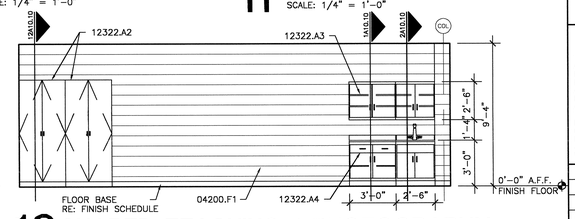

16 SHARED TEACHING / PHOTOGRAPHY
SCALE: 1/4" = 1'-0"

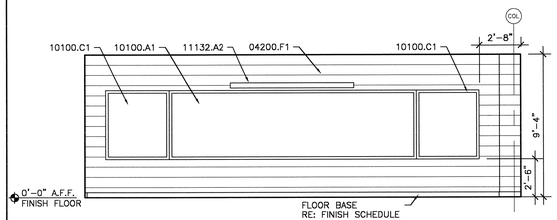

17 SHARED TEACHING / PHOTOGRAPHY
SCALE: 1/4" = 1'-0"

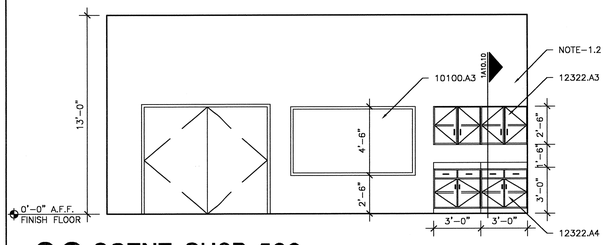

22 SCENE SHOP 506
SCALE: 1/4" = 1'-0"

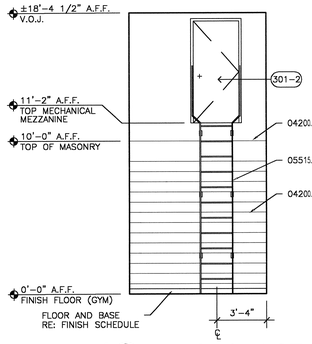

18 P.E. STORAGE 301
SCALE: 1/4" = 1'-0"

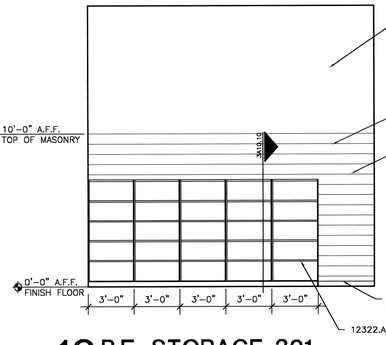

19 P.E. STORAGE 301
SCALE: 1/4" = 1'-0"

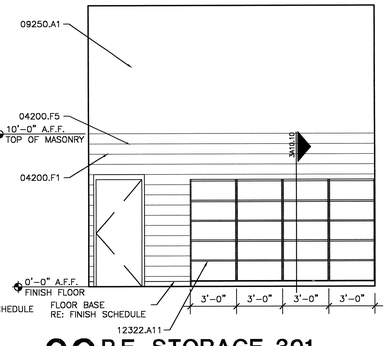

20 P.E. STORAGE 301
SCALE: 1/4" = 1'-0"

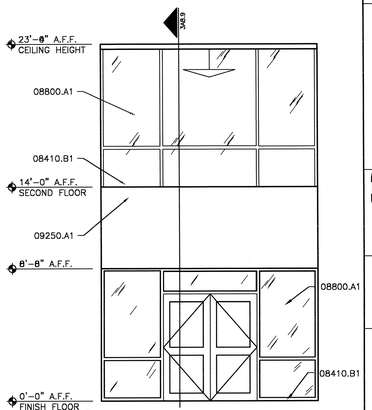

21 VESTIBULE 100
SCALE: 1/4" = 1'-0"

MATERIAL KEYNOTES

04200.F1	8 X 8 X 16 CONCRETE MASONRY UNITS
04200.F5	CONCRETE MASONRY U-BLOCK BOND BEAM CONCRETE FILLED WITH 2- #5 REBAR
05515.A1	FIXED ALUMINUM WALL LADDER
08410.B1	ALUMINUM STOREFRONT FRAMING (INTERIOR)
08800.A1	1/4" TINTED AND HEAT TREATED FLOAT GLASS
08800.A2	1/4" TEMPERED GLASS – INTERIOR GLAZING
09250.A1	5/8" GYPSUM BOARD
10100.A1	WHITE MARKER BOARD (DRY-ERASE) (4'H X 16'W)
10100.A3	WHITE MARKER BOARD (DRY-ERASE) (4'H X 8'W)
10100.C1	TACKBOARD (4'H X 4'W)
11132.A2	MANUALLY OPERATED, WALL MOUNTED PROJECTION SCREEN (8' W X 8' H)
12322.A10	PLASTIC LAMINATE COUNTERTOP
12322.A11	ALL OPEN STORAGE SHELVING W/ ADJUSTABLE SHELVES AND ONE FIXED. 18" DEEP x 84" HIGH RE: ELEVATION FOR WIDTH
12322.A2	PLASTIC LAMINATED FACE CASEWORK WARDROBE CABINET
12322.A3	PLASTIC LAMINATED FACE CASEWORK UPPER CABINET
12322.A4	PLASTIC LAMINATED FACE CASEWORK BASE CABINET
12322.A7	OPEN STORAGE SHELVING WITH 4 ADJUSTABLE SHELVES AND ONE FIXED, WIDTH INDICATED ON DRAWINGS, 24" DEEP BY 84" HIGH
NOTE-1.2	PRECAST CONCRETE PANEL RE: STRUCTURAL
NOTE-10	3'-0" WIDE x 6'-0" HIGH x 1/4" THICK LAMINATED MIRRORED GLASS
NOTE-11	BALLET BARRE – VERIFY MOUNTING HEIGHT PRIOR TO ISTALLATION.
NOTE-3.5	SINK RE: PLUMBING

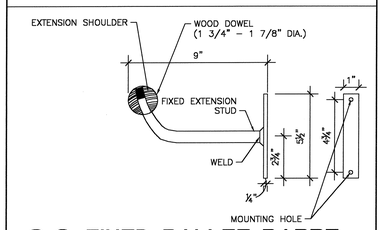

22 FIXED BALLET BARRE BRACKET DETAIL
SCALE: 3" = 1'-0"

KEY PLAN

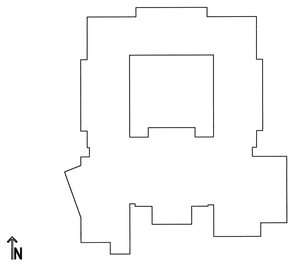

USE OF ARCHITECT'S DRAWINGS, SPECIFICATIONS AND OTHER DOCUMENTS

THE DRAWINGS, SPECIFICATIONS AND OTHER DOCUMENTS PREPARED BY THE ARCHITECT FOR THIS PROJECT ARE INSTRUMENTS OF THE ARCHITECT'S SERVICE FOR USE SOLELY WITH RESPECT TO THIS PROJECT AND, UNLESS OTHERWISE PROVIDED, THE ARCHITECT SHALL BE DEEMED THE AUTHOR OF THESE DOCUMENTS AND SHALL RETAIN ALL COMMON LAW, STATUTORY AND OTHER RESERVED RIGHTS, INCLUDING REPRODUCIBLE COPIES, OF THE ARCHITECT'S DRAWINGS, SPECIFICATIONS AND OTHER DOCUMENTS FOR INFORMATION AND REFERENCE IN CONNECTION WITH THE OWNER'S USE AND OCCUPANCY OF THE PROJECT. THE ARCHITECT'S DRAWINGS, SPECIFICATIONS OR OTHER DOCUMENTS SHALL NOT BE USED BY THE OWNER OR OTHERS ON OTHER PROJECTS, FOR ADDITIONS TO THIS PROJECT OR FOR COMPLETION OF THIS PROJECT BY OTHERS, UNLESS THE ARCHITECT IS ADJUDGED TO BE IN DEFAULT UNDER THIS AGREEMENT, EXCEPT BY AGREEMENT IN WRITING AND WITH APPROPRIATE COMPENSATION TO THE ARCHITECT.

NO.	DATE	REVISION/SUBMISSION
1	11/12/04	FIRE MARSHAL AND C.P. REVISIONS

McKINLEY MIDDLE MAGNET SCHOOL

1550 EDDIE ROBINSON SR. DRIVE
BATON ROUGE, LOUISIANA 70802

Robert M. Coleman & Partners Architects A.I.A.
3377 North Boulevard
Baton Rouge, Louisiana 70806
U.S.A.
tel 225.387.4414
fax 225.387.4893

INTERIOR ELEVATIONS

PROJECT NO. 03048	SHEET NO.. A10.9
DRAWN BY CS, BH, JM	
CHECKED BY JS	
DATE October 15, 2004	OF

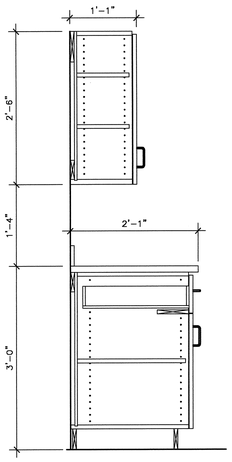

1 SECTION
SCALE: 1" = 1'-0"

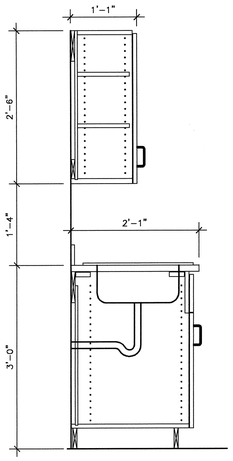

2 SECTION
SCALE: 1" = 1'-0"

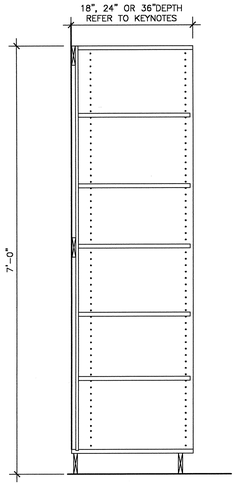

3 SECTION
SCALE: 1" = 1'-0"

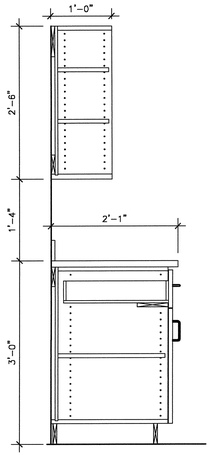

4 SECTION
SCALE: 1" = 1'-0"

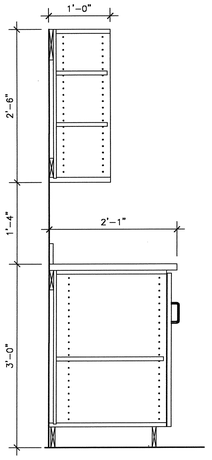

5 SECTION
SCALE: 1" = 1'-0"

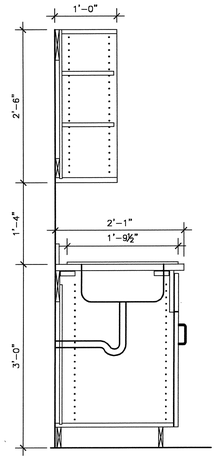

6 SECTION
SCALE: 1" = 1'-0"

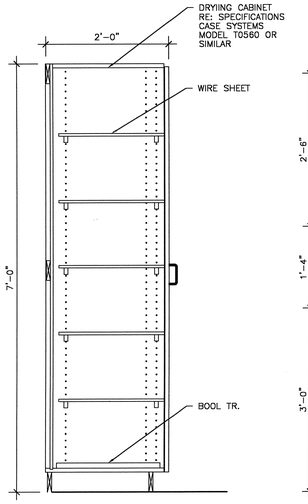

7 DRYING CABINET STORAGE
SCALE: 1" = 1'-0"

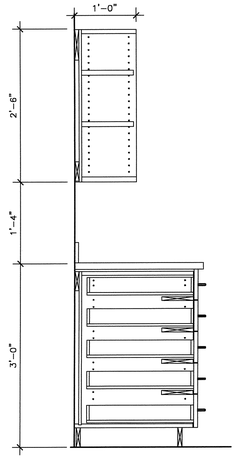

8 FIVE DRAWER PAPER STORAGE
SCALE: 1" = 1'-0"

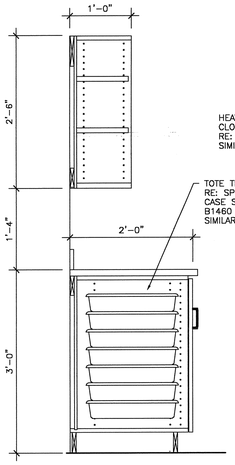

9 TOTE TRAY STORAGE
SCALE: 1" = 1'-0"

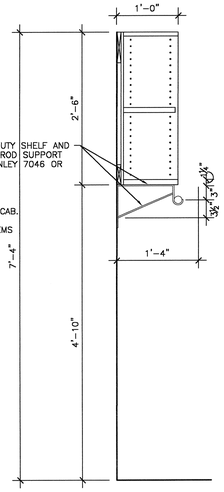

10 SECTION
SCALE: 1" = 1'-0"

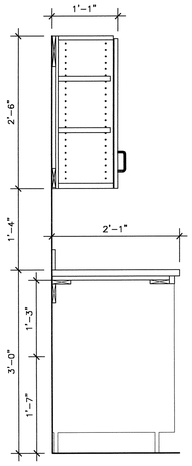

11 SECTION
SCALE: 1" = 1'-0"

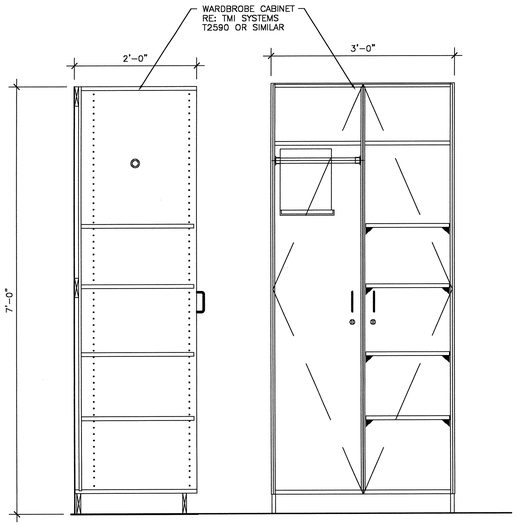

12 WARDROBE CABINET SECTION AND ELEVATION
SCALE: 1" = 1'-0"

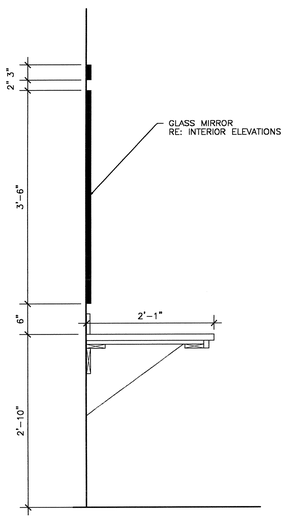

13 SECTION AT DRESSING AREA
SCALE: 1" = 1'-0"

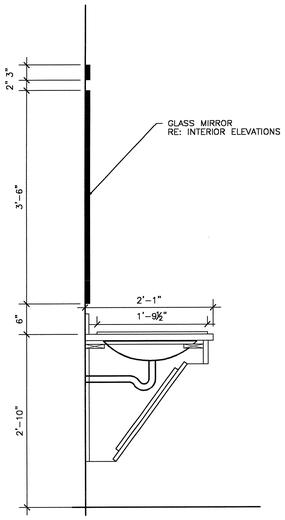

14 HANDICAP ACCES. SINK AT DRESS. RM
SCALE: 1" = 1'-0"

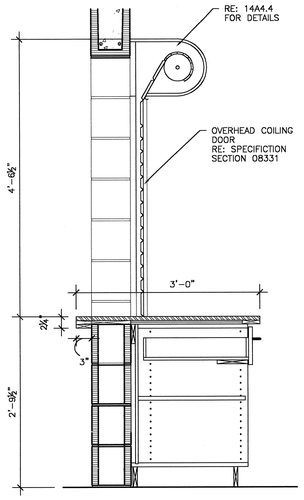

15 ROLL-UP DOOR AND COUNTER
SCALE: 1" = 1'-0"

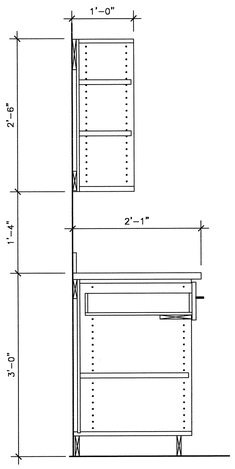

16 SECTION
SCALE: 1" = 1'-0"

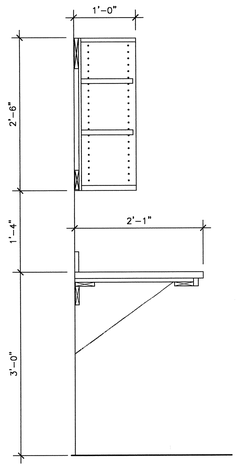

17 SECTION
SCALE: 1" = 1'-0"

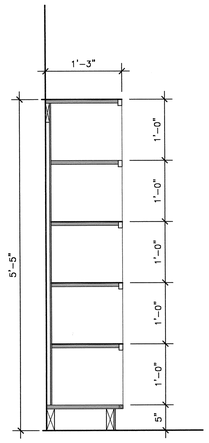

18 SECTION
SCALE: 1" = 1'-0"

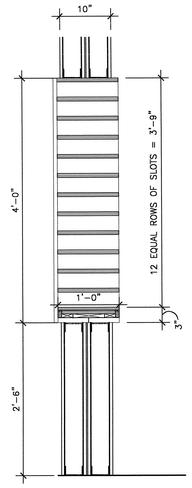

19 SECTION
SCALE: 1" = 1'-0"

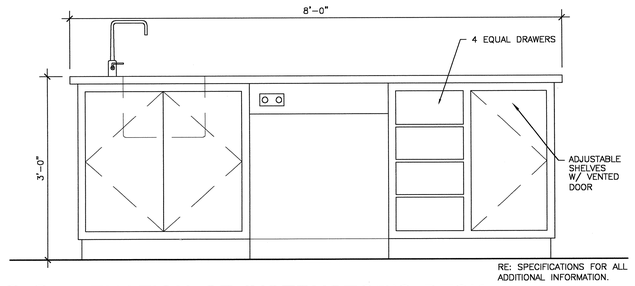

20 ELEVATION OF INSTRUCTOR'S DESK
SCALE: 1" = 1'-0"

MATERIAL KEYNOTES

04220 CONCRETE UNIT MASONRY

KEY PLAN

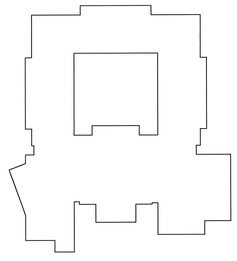

USE OF ARCHITECT'S DRAWINGS, SPECIFICATIONS AND OTHER DOCUMENTS

THE DRAWINGS, SPECIFICATIONS AND OTHER DOCUMENTS PREPARED BY THE ARCHITECT FOR THIS PROJECT ARE INSTRUMENTS OF THE ARCHITECT'S SERVICE FOR USE SOLELY WITH RESPECT TO THIS PROJECT AND, UNLESS OTHERWISE PROVIDED, THE ARCHITECT SHALL BE DEEMED THE AUTHOR OF THESE DOCUMENTS AND SHALL RETAIN ALL COMMON LAW, STATUTORY AND OTHER RESERVED RIGHTS, INCLUDING REPRODUCIBLE COPIES, OF THE ARCHITECT'S DRAWINGS, SPECIFICATIONS AND OTHER DOCUMENTS FOR INFORMATION AND REFERENCE IN CONNECTION WITH THE OWNER'S USE AND OCCUPANCY OF THE PROJECT. THE ARCHITECT'S DRAWINGS, SPECIFICATIONS OR OTHER DOCUMENTS SHALL NOT BE USED BY THE OWNER OR OTHERS ON OTHER PROJECTS, FOR ADDITIONS TO THIS PROJECT OR FOR COMPLETION OF THIS PROJECT BY OTHERS, UNLESS THE ARCHITECT IS ADJUDGED TO BE IN DEFAULT UNDER THIS AGREEMENT, EXCEPT BY AGREEMENT IN WRITING AND WITH APPROPRIATE COMPENSATION TO THE ARCHITECT.

NO.	DATE	REVISION/SUBMISSION
1	11/12/04	FIRE MARSHAL AND C.P. REVISIONS

McKINLEY MIDDLE MAGNET SCHOOL

1550 EDDIE ROBINSON SR. DRIVE
BATON ROUGE, LOUISIANA 70802

Robert M. Coleman & Partners Architects A.I.A.
3377 North Boulevard
Baton Rouge, Louisiana 70808
U.S.A.
tel 225.387.4414
fax 225.387.4693

MILLWORK DETAILS

BRUCE W. SCHELL
REGISTERED ARCHITECT
STATE OF LOUISIANA

PROJECT NO.	03048
DRAWN BY	BH
CHECKED BY	JS
DATE	October 15, 2004
SHEET NO..	A10.10
	OF

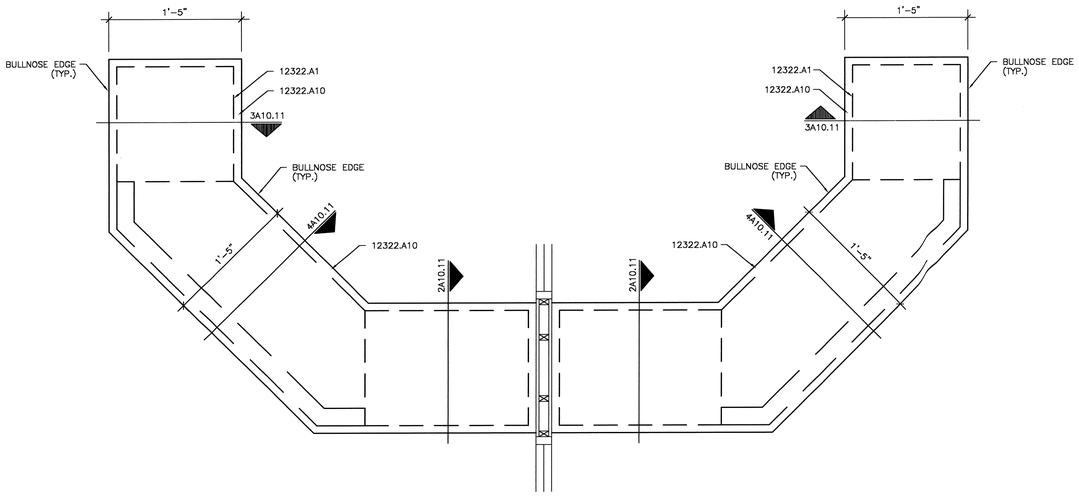

1 RECEPTIONIST/ GUIDANCE DESK
SCALE: 1 1/2" = 1'-0"

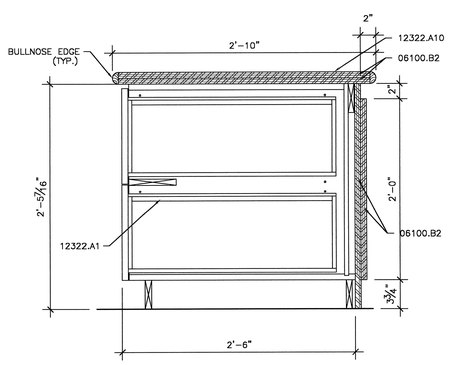

2 SECTION
SCALE: 1 1/2" = 1'-0"

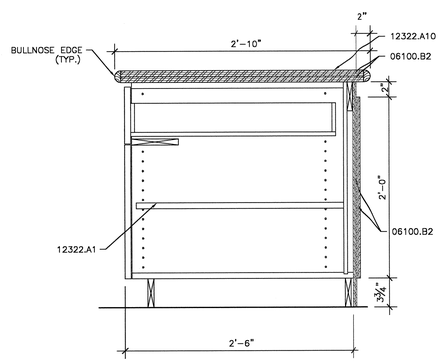

3 SECTION
SCALE: 1 1/2" = 1'-0"

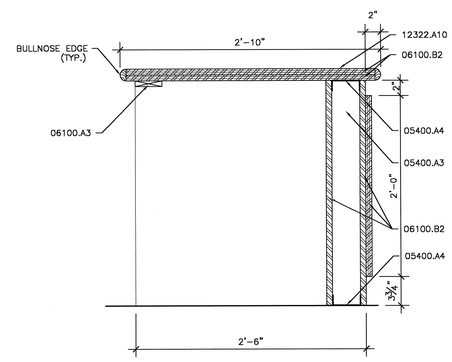

4 SECTION
SCALE: 1 1/2" = 1'-0"

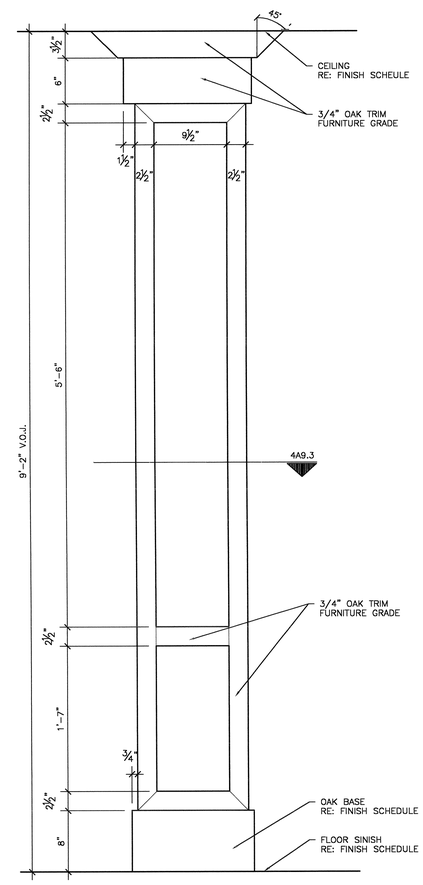

5 COLUMN ELEVATION
SCALE: 1 1/2" = 1'-0"

NOTE: FINISH ON COLUMN IS TO MATCH LIBRARY FURNITURE.

MATERIAL KEYNOTES

05400.A3	3-5/8" METAL STUDS
05400.A4	3-5/8" METAL STUD TRACK
06100.A1	2X WOOD BLOCKING
06100.A3	1X WOOD BLOCKING
06100.B2	3/4" PLYWOOD
12322.A1	PLASTIC LAMINATED FACE CASEWORK
12322.A10	PLASTIC LAMINATE COUNTERTOP

NOTE: INSTALL PLASTIC LAMINATE ON ALL 3/4" PLYWOOD SUBSTRATES TO MATCH EXISTING CASEWORK.

KEY PLAN

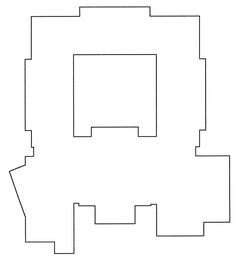

USE OF ARCHITECT'S DRAWINGS, SPECIFICATIONS AND OTHER DOCUMENTS

THE DRAWINGS, SPECIFICATIONS AND OTHER DOCUMENTS PREPARED BY THE ARCHITECT FOR THIS PROJECT ARE INSTRUMENTS OF THE ARCHITECT'S SERVICE FOR USE SOLELY WITH RESPECT TO THIS PROJECT AND, UNLESS OTHERWISE PROVIDED, THE ARCHITECT SHALL BE DEEMED THE AUTHOR OF THESE DOCUMENTS AND SHALL RETAIN ALL COMMON LAW, STATUTORY AND OTHER RESERVED RIGHTS, INCLUDING REPRODUCIBLE COPIES, OF THE ARCHITECT'S DRAWINGS, SPECIFICATIONS AND OTHER DOCUMENTS FOR INFORMATION AND REFERENCE IN CONNECTION WITH THE OWNER'S USE AND OCCUPANCY OF THE PROJECT. THE ARCHITECT'S DRAWINGS, SPECIFICATIONS OR OTHER DOCUMENTS SHALL NOT BE USED BY THE OWNER OR OTHERS ON OTHER PROJECTS, FOR ADDITIONS TO THIS PROJECT OR FOR COMPLETION OF THIS PROJECT BY OTHERS, UNLESS THE ARCHITECT IS ADJUDGED TO BE IN DEFAULT UNDER THIS AGREEMENT, EXCEPT BY AGREEMENT IN WRITING AND WITH APPROPRIATE COMPENSATION TO THE ARCHITECT.

NO.	DATE	REVISION/SUBMISSION
1	11/12/04	FIRE MARSHAL AND C.P. REVISIONS

McKINLEY MIDDLE MAGNET SCHOOL

1550 EDDIE ROBINSON SR. DRIVE
BATON ROUGE, LOUISIANA 70802

Robert M. Coleman & Partners Architects A.I.A.
3377 North Boulevard
Baton Rouge, Louisiana 70808
U.S.A.
tel 225.387.4414
fax 225.387.4693

MILLWORK DETAILS

PROJECT NO. 03048	SHEET NO.. A10.11
DRAWN BY	
CHECKED BY JS	
DATE October 15, 2004	____ OF ____

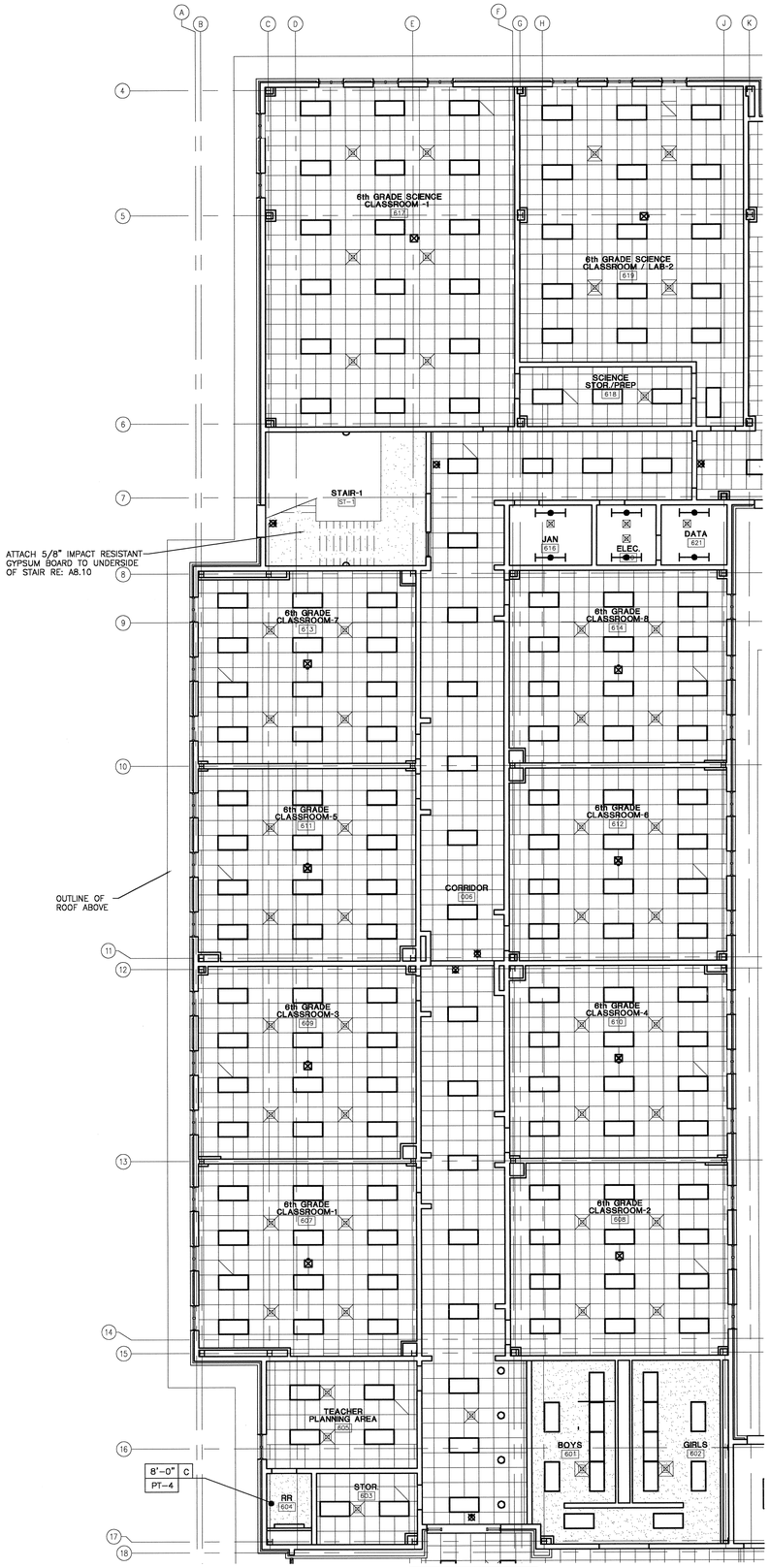

N

PROJECT

1 REFLECTED 1ST FLOOR CEILING PLAN - 6TH GRADE WING

SCALE: 1/8" = 1'-0"

0 4' 8' 16'

SCALE: 1/8" = 1'-0"

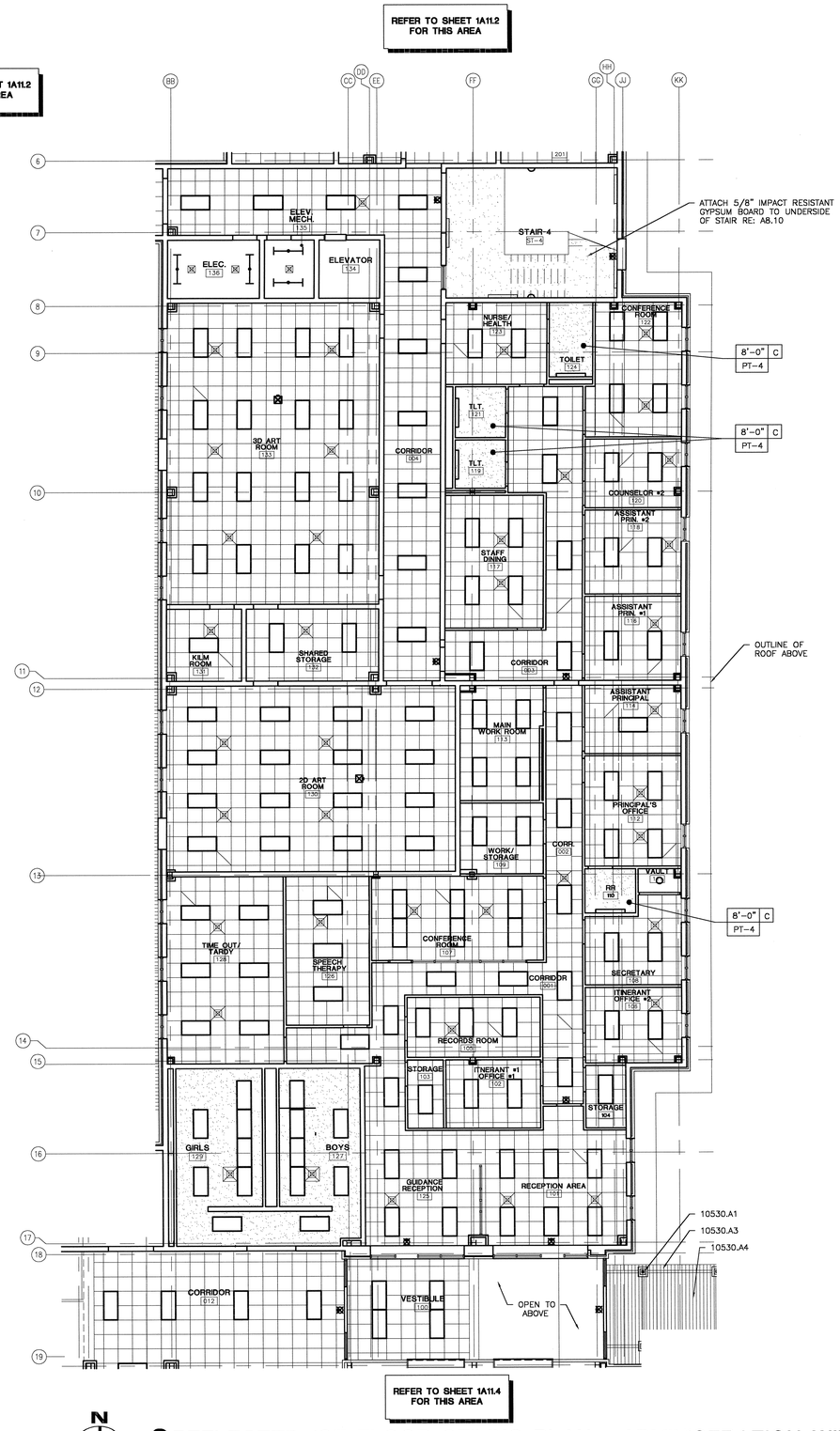

N

PROJECT

2 REFLECTED 1ST FLOOR CEILING PLAN - ADMINISTRATION WING

SCALE: 1/8" = 1'-0"

MATERIAL KEYNOTES

10530.A1	WALKWAY COVER COLUMN (DRAINABLE)
10530.A3	WALKWAY COVER BEAM
10530.A4	WALKWAY COVER DECK

CEILING TYPES

A		2 x 2 SUSPENDED ACOUSTICAL TILE CEILING RE: SPECIFICATION SECTION 09511 RE: FINISH SCHEDULE FOR TYPE OF ACT
B		EXPOSED STRUCTURE
C		GYPSUM BOARD CEILING ON SUSPENSION SLOW SYSTEM RE: 09250 AND FINISH SCHEDULE

LEGEND

A	CEILING TYPE
7'-8"	CEILING HEIGHT ABOVE FINISHED FLOOR
PAINT	CEILING FINISH RE: FINISH SCHEDULE
	2x4 FLUORESCENT RE: ELECTRICAL
	WALL MOUNTED LIGHT FIXTURE RE: ELECTRICAL
	WALL MOUNTED LIGHT FIXTURE RE: ELECTRICAL
	SUSPENDED LIGHT FIXTURE RE: ELECTRICAL
	SUSPENDED LIGHT FIXTURE RE: ELECTRICAL
	RE: ELECTRICAL COMPACT FLUORESCENT RE: ELECTRICAL
	EXIT FIXTURE RE: ELECTRICAL
	CEILING MOUNTED PROJECTOR (NIC) RE: ELECTRICAL FOR SCOPE OF WORK
	RETURN AIR GRILL RE: MECHANICAL
	SUPPLY AIR DIFFUSER RE: MECHANICAL

GENERAL NOTES

1.) CLASSROOM CEILING HEIGHT TO BE 9'-4" UNLESS OTHERWISE NOTED.

2.) CORRIDOR CEILING HEIGHT TO BE 9'-4" UNLESS OTHERWISE NOTED.

3.) REFER TO FINISH SCHEDULE FOR CEILING HEIGHTS.

KEY PLAN

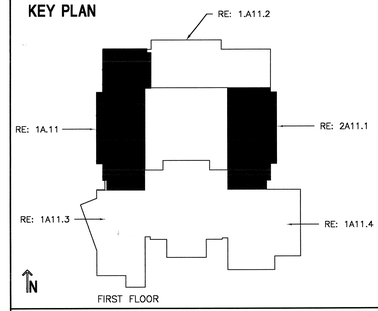

USE OF ARCHITECT'S DRAWINGS, SPECIFICATIONS AND OTHER DOCUMENTS

THE DRAWINGS, SPECIFICATIONS AND OTHER DOCUMENTS PREPARED BY THE ARCHITECT FOR THIS PROJECT ARE INSTRUMENTS OF THE ARCHITECT'S SERVICE FOR USE SOLELY WITH RESPECT TO THIS PROJECT AND, UNLESS OTHERWISE PROVIDED, THE ARCHITECT SHALL BE DEEMED THE AUTHOR OF THESE DOCUMENTS AND SHALL RETAIN ALL COMMON LAW, STATUTORY AND OTHER RESERVED RIGHTS, INCLUDING REPRODUCIBLE COPIES, OF THE ARCHITECT'S DRAWINGS, SPECIFICATIONS AND OTHER DOCUMENTS FOR INFORMATION AND REFERENCE IN CONNECTION WITH THE OWNER'S USE AND OCCUPANCY OF THE PROJECT. THE ARCHITECT'S DRAWINGS, SPECIFICATIONS OR OTHER DOCUMENTS SHALL NOT BE USED BY THE OWNER OR OTHERS ON OTHER PROJECTS, FOR ADDITIONS TO THIS PROJECT OR FOR COMPLETION OF THIS PROJECT BY OTHERS, UNLESS THE ARCHITECT IS ADJUDGED TO BE IN DEFAULT UNDER THIS AGREEMENT, EXCEPT BY AGREEMENT IN WRITING AND WITH APPROPRIATE COMPENSATION TO THE ARCHITECT.

NO.	DATE	REVISION/SUBMISSION
1	11/12/04	FIRE MARSHAL AND C.P. REVISIONS

McKINLEY MIDDLE MAGNET SCHOOL

1550 EDDIE ROBINSON SR. DRIVE
BATON ROUGE, LOUISIANA 70802

Robert M. Coleman Architects & Partners A.I.A.
3377 North Boulevard
Baton Rouge, Louisiana 70806
U.S.A.
tel 225.387.4414
fax 225.387.4693

PARTIAL REFLECTED CEILING PLAN FIRST FLOOR

PROJECT NO. 03048	SHEET NO..
DRAWN BY BH, CS	A11.1
CHECKED BY JS	
DATE October 15, 2004	OF

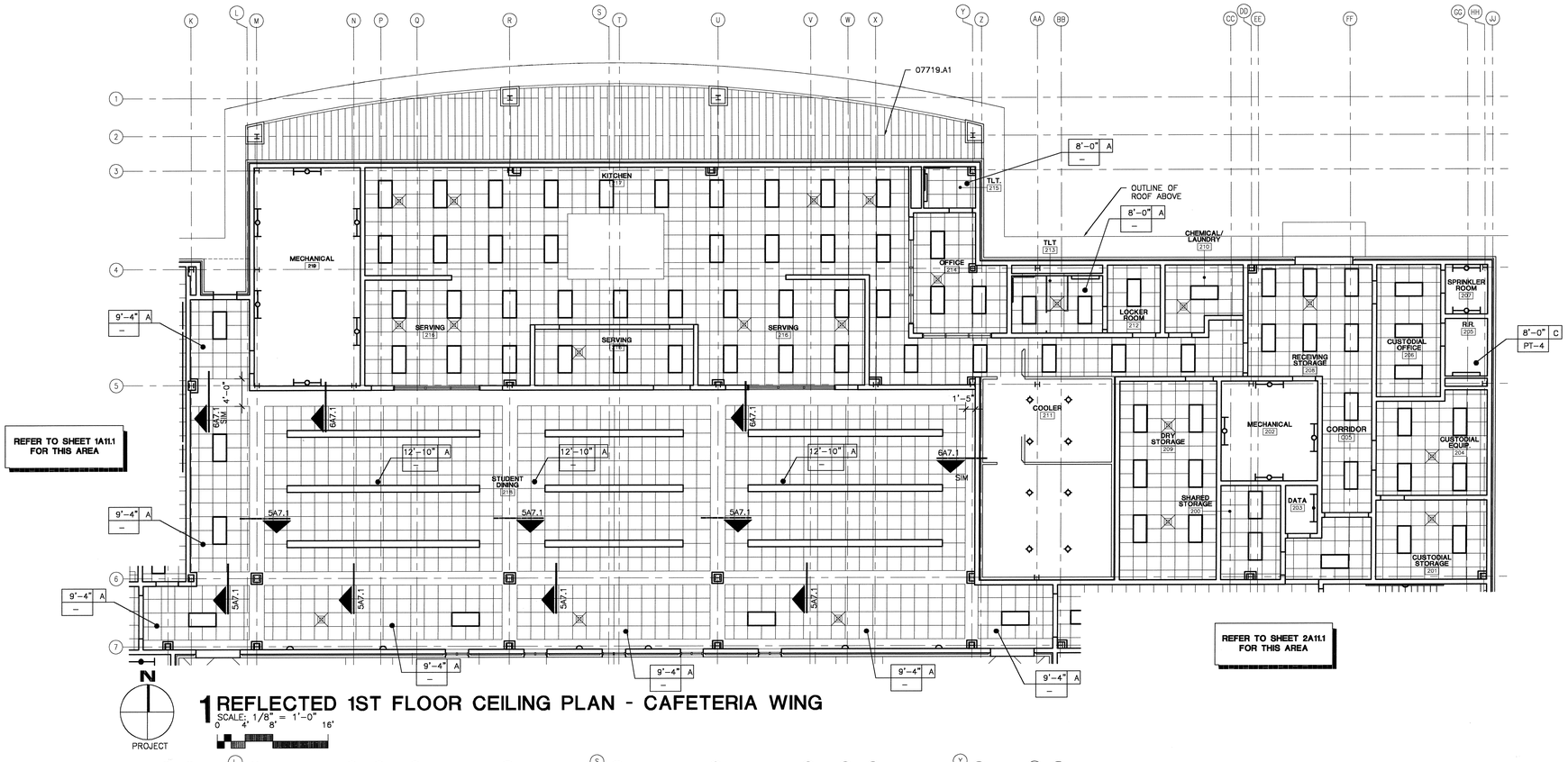

1 REFLECTED 1ST FLOOR CEILING PLAN - CAFETERIA WING

SCALE: 1/8" = 1'-0"

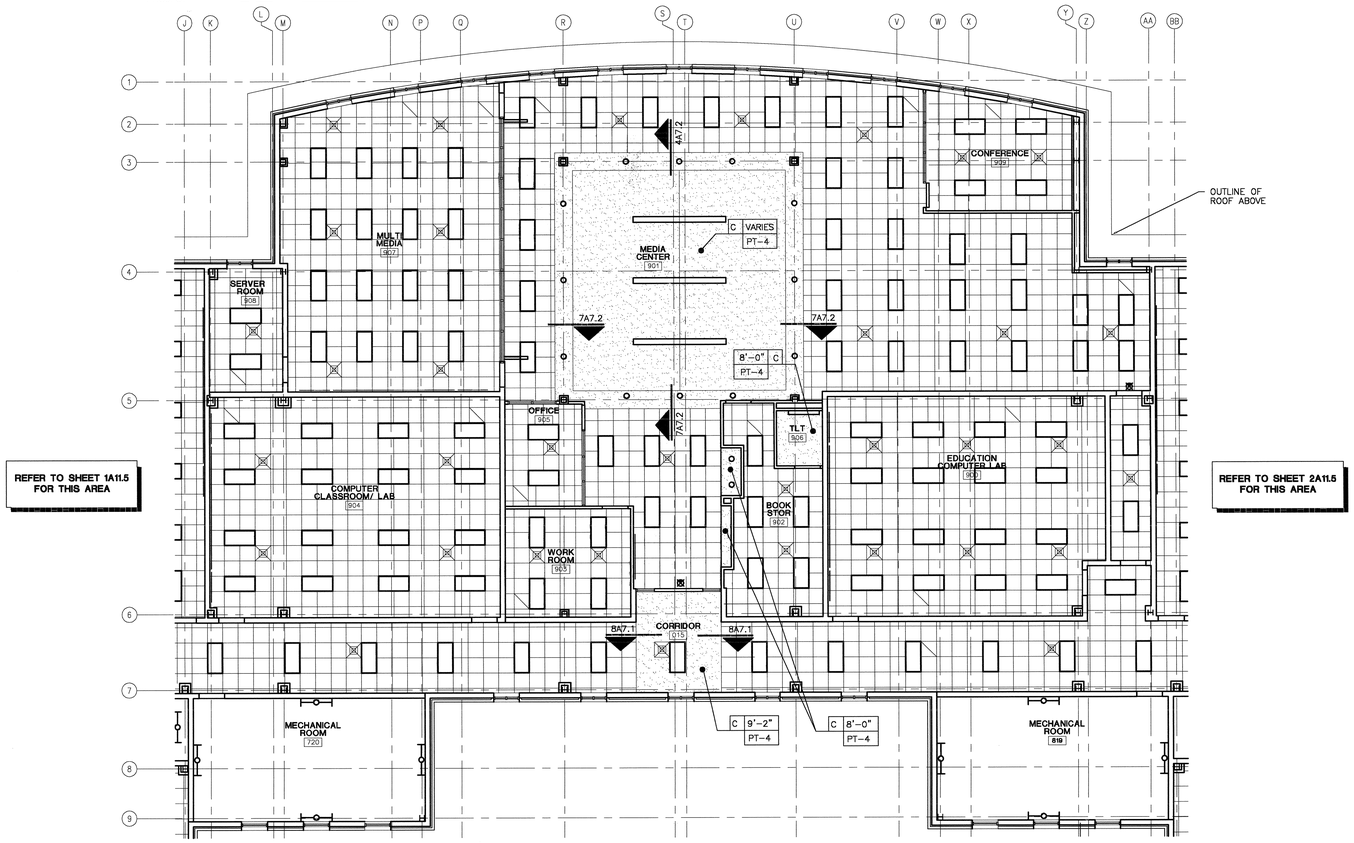

2 REFLECTED 2ND FLOOR CEILING PLAN - MEDIA CENTER WING

SCALE: 1/8" = 1'-0"

MATERIAL KEYNOTES

05120	STRUCTURAL STEEL
07719.A1	PREFINISHED METAL SOFFIT PANEL

CEILING TYPES

A		2 x 2 SUSPENDED ACOUSTICAL TILE CEILING RE: SPECIFICATION SECTION 09511 RE: FINISH SCHEDULE FOR TYPE OF ACT
B		EXPOSED STRUCTURE
C		GYPSUM BOARD CEILING ON SUSPENSION SLOW SYSTEM RE: 09250 AND FINISH SCHEDULE

LEGEND

- CEILING TYPE
- A 7'-8" / PAINT — CEILING HEIGHT ABOVE FINISHED FLOOR; CEILING FINISH RE: FINISH SCHEDULE
- 2x4 FLUORESCENT RE: ELECTRICAL
- WALL MOUNTED LIGHT FIXTURE RE: ELECTRICAL
- WALL MOUNTED LIGHT FIXTURE RE: ELECTRICAL
- SUSPENDED LIGHT FIXTURE RE: ELECTRICAL
- SUSPENDED LIGHT FIXTURE RE: ELECTRICAL
- RE: ELECTRICAL
- COMPACT FLUORESCENT RE: ELECTRICAL
- EXIT FIXTURE RE: ELECTRICAL
- CEILING MOUNTED PROJECTOR (NIC) RE: ELECTRICAL FOR SCOPE OF WORK
- RETURN AIR GRILL RE: MECHANICAL
- SUPPLY AIR DIFFUSER RE: MECHANICAL

GENERAL NOTES

1.) CLASSROOM CEILING HEIGHT TO BE 9'-4" UNLESS OTHERWISE NOTED.

2.) CORRIDOR CEILING HEIGHT TO BE 9'-4" UNLESS OTHERWISE NOTED.

3.) REFER TO FINISH SCHEDULE FOR CEILING HEIGHTS.

KEY PLAN

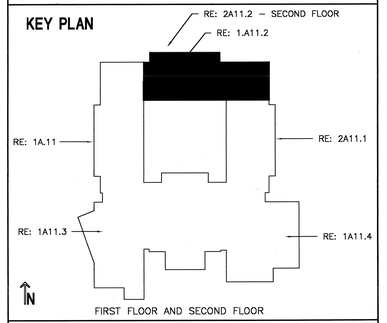

FIRST FLOOR AND SECOND FLOOR

USE OF ARCHITECT'S DRAWINGS, SPECIFICATIONS AND OTHER DOCUMENTS

THE DRAWINGS, SPECIFICATIONS AND OTHER DOCUMENTS PREPARED BY THE ARCHITECT FOR THIS PROJECT ARE INSTRUMENTS OF THE ARCHITECT'S SERVICE FOR USE SOLELY WITH RESPECT TO THIS PROJECT AND, UNLESS OTHERWISE PROVIDED, THE ARCHITECT SHALL BE DEEMED THE AUTHOR OF THESE DOCUMENTS AND SHALL RETAIN ALL COMMON LAW, STATUTORY AND OTHER RESERVED RIGHTS, INCLUDING REPRODUCIBLE COPIES, OF THE ARCHITECT'S DRAWINGS, SPECIFICATIONS AND OTHER DOCUMENTS FOR INFORMATION AND REFERENCE IN CONNECTION WITH THE OWNER'S USE AND OCCUPANCY OF THE PROJECT. THE ARCHITECT'S DRAWINGS, SPECIFICATIONS OR OTHER DOCUMENTS SHALL NOT BE USED BY THE OWNER OR OTHERS ON OTHER PROJECTS, FOR ADDITIONS TO THIS PROJECT OR FOR COMPLETION OF THIS PROJECT BY OTHERS, UNLESS THE ARCHITECT IS ADJUDGED TO BE IN DEFAULT UNDER THIS AGREEMENT, EXCEPT BY AGREEMENT IN WRITING AND WITH APPROPRIATE COMPENSATION TO THE ARCHITECT.

NO.	DATE	REVISION/SUBMISSION
1	11/12/04	FIRE MARSHAL AND C.P. REVISIONS

McKINLEY MIDDLE MAGNET SCHOOL

1550 EDDIE ROBINSON SR. DRIVE
BATON ROUGE, LOUISIANA 70802

Robert M. Coleman & Partners Architects A.I.A.
3377 North Boulevard
Baton Rouge, Louisiana 70806
U.S.A.
tel 225.387.4414
fax 225.387.4693

PARTIAL REFLECTED CEILING PLAN FIRST FLOOR AND SECOND FLOOR

PROJECT NO. 03048	SHEET NO..
DRAWN BY BH, JM	A11.2
CHECKED BY JS	
DATE October 15, 2004	OF

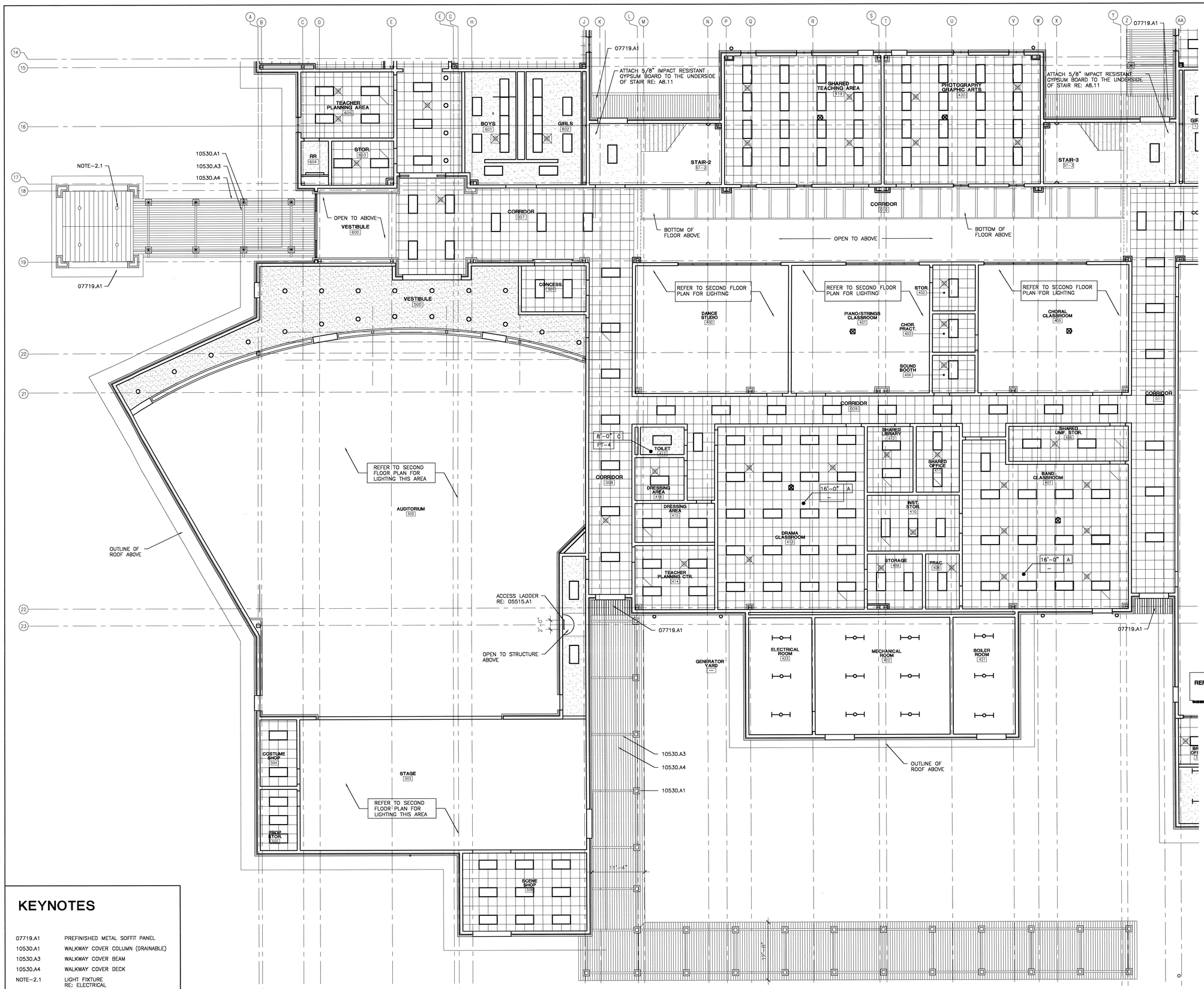

KEYNOTES

07719.A1	PREFINISHED METAL SOFFIT PANEL
10530.A1	WALKWAY COVER COLUMN (DRAINABLE)
10530.A3	WALKWAY COVER BEAM
10530.A4	WALKWAY COVER DECK
NOTE-2.1	LIGHT FIXTURE RE: ELECTRICAL

N

PROJECT

1 PARTIAL 1ST FLOOR REFLECTED CEILING PLAN - PERFORMING ARTS WING

SCALE: 1/8" = 1'-0"

0 4' 8' 16'

CEILING TYPES

A		2 x 2 SUSPENDED ACOUSTICAL TILE CEILING RE: SPECIFICATION SECTION 09511 RE: FINISH SCHEDULE FOR TYPE OF ACT
B		EXPOSED STRUCTURE
C		GYPSUM BOARD CEILING ON SUSPENSION SLOW SYSTEM RE: 09250 AND FINISH SCHEDULE

LEGEND

- A / 7'-8" / PAINT — CEILING TYPE; CEILING HEIGHT ABOVE FINISHED FLOOR; CEILING FINISH RE: FINISH SCHEDULE
- 2x4 FLUORESCENT RE: ELECTRICAL
- WALL MOUNTED LIGHT FIXTURE RE: ELECTRICAL
- WALL MOUNTED LIGHT FIXTURE RE: ELECTRICAL
- SUSPENDED LIGHT FIXTURE RE: ELECTRICAL
- SUSPENDED LIGHT FIXTURE RE: ELECTRICAL
- RE: ELECTRICAL COMPACT FLUORESCENT RE: ELECTRICAL
- EXIT FIXTURE RE: ELECTRICAL
- P — CEILING MOUNTED PROJECTOR (NIC) RE: ELECTRICAL FOR SCOPE OF WORK
- RETURN AIR GRILL RE: MECHANICAL
- SUPPLY AIR DIFFUSER RE: MECHANICAL

GENERAL NOTES

1.) CLASSROOM CEILING HEIGHT TO BE 9'-4" UNLESS OTHERWISE NOTED.

2.) CORRIDOR CEILING HEIGHT TO BE 9'-4" UNLESS OTHERWISE NOTED.

3.) REFER TO FINISH SCHEDULE FOR CEILING HEIGHTS.

KEY PLAN

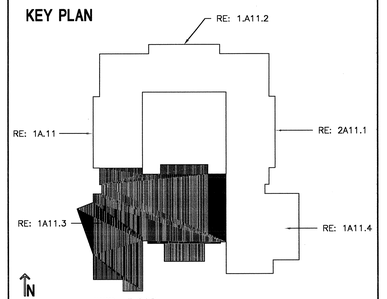

FIRST FLOOR

USE OF ARCHITECT'S DRAWINGS, SPECIFICATIONS AND OTHER DOCUMENTS

THE DRAWINGS, SPECIFICATIONS AND OTHER DOCUMENTS PREPARED BY THE ARCHITECT FOR THIS PROJECT ARE INSTRUMENTS OF THE ARCHITECT'S SERVICE FOR USE SOLELY WITH RESPECT TO THIS PROJECT AND, UNLESS OTHERWISE PROVIDED, THE ARCHITECT SHALL BE DEEMED THE AUTHOR OF THESE DOCUMENTS AND SHALL RETAIN ALL COMMON LAW, STATUTORY AND OTHER RESERVED RIGHTS, INCLUDING REPRODUCIBLE COPIES, OF THE ARCHITECT'S DRAWINGS, SPECIFICATIONS AND OTHER DOCUMENTS FOR INFORMATION AND REFERENCE IN CONNECTION WITH THE OWNER'S USE AND OCCUPANCY OF THE PROJECT. THE ARCHITECT'S DRAWINGS, SPECIFICATIONS OR OTHER DOCUMENTS SHALL NOT BE USED BY THE OWNER OR OTHERS ON OTHER PROJECTS, FOR ADDITIONS TO THIS PROJECT OR FOR COMPLETION OF THIS PROJECT BY OTHERS, UNLESS THE ARCHITECT IS ADJUDGED TO BE IN DEFAULT UNDER THIS AGREMENT, EXCEPT BY AGREEMENT IN WRITING AND WITH APPROPRIATE COMPENSATION TO THE ARCHITECT.

NO.	DATE	REVISION/SUBMISSION
1	11/12/04	FIRE MARSHAL AND C.P. REVISIONS

McKINLEY MIDDLE MAGNET SCHOOL

1550 EDDIE ROBINSON SR. DRIVE
BATON ROUGE, LOUISIANA 70802

Robert M. Coleman & Partners Architects A.I.A.
3377 North Boulevard
Baton Rouge, Louisiana 70806
U.S.A.
tel 225.387.4414
fax 225.387.4693

PARTIAL REFLECTED CEILING PLAN FIRST FLOOR

PROJECT NO. 03048	SHEET NO.. A11.3
DRAWN BY BH	
CHECKED BY JS	
DATE October 15, 2004	OF

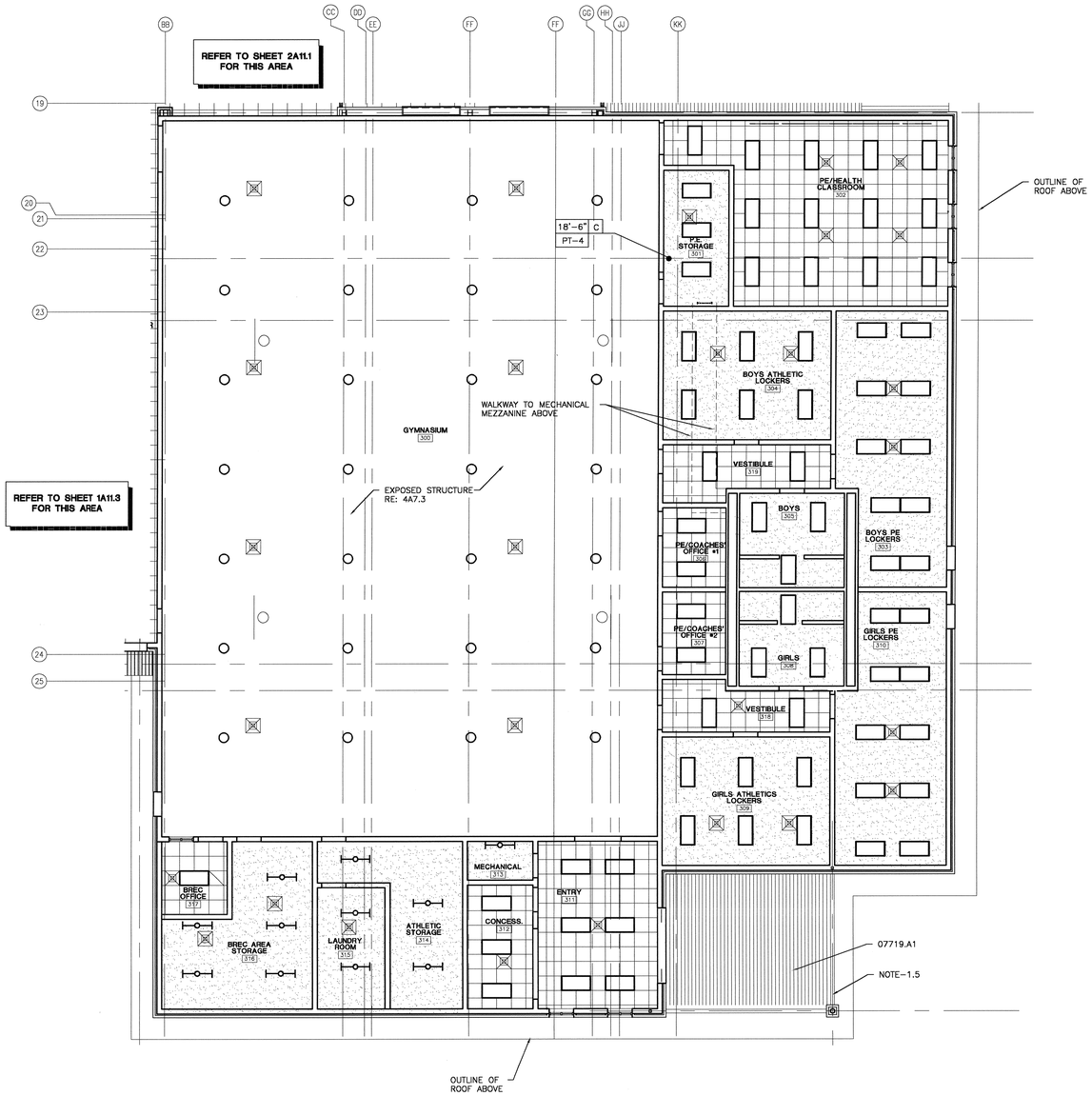

N

PROJECT

1 REFLECTED 1ST FLOOR CEILING PLAN - GYMNASIUM WING

SCALE: 1/8" = 1'-0"

0 4' 8' 16'

CEILING TYPES

A		2 x 2 SUSPENDED ACOUSTICAL TILE CEILING RE: SPECIFICATION SECTION 09511 RE: FINISH SCHEDULE FOR TYPE OF ACT
B		EXPOSED STRUCTURE
C		GYPSUM BOARD CEILING ON SUSPENSION SLOW SYSTEM RE: 09250 AND FINISH SCHEDULE

LEGEND

- A 7'-8" / PAINT — CEILING TYPE; CEILING HEIGHT ABOVE FINISHED FLOOR; CEILING FINISH RE: FINISH SCHEDULE
- 2x4 FLUORESCENT RE: ELECTRICAL
- WALL MOUNTED LIGHT FIXTURE RE: ELECTRICAL
- WALL MOUNTED LIGHT FIXTURE RE: ELECTRICAL
- SUSPENDED LIGHT FIXTURE RE: ELECTRICAL
- SUSPENDED LIGHT FIXTURE RE: ELECTRICAL
- COMPACT FLUORESCENT RE: ELECTRICAL
- EXIT FIXTURE RE: ELECTRICAL
- CEILING MOUNTED PROJECTOR (NIC) RE: ELECTRICAL FOR SCOPE OF WORK
- RETURN AIR GRILL RE: MECHANICAL
- SUPPLY AIR DIFFUSER RE: MECHANICAL

GENERAL NOTES

1.) CLASSROOM CEILING HEIGHT TO BE 9'-4" UNLESS OTHERWISE NOTED.

2.) CORRIDOR CEILING HEIGHT TO BE 9'-4" UNLESS OTHERWISE NOTED.

3.) REFER TO FINISH SCHEDULE FOR CEILING HEIGHTS.

KEY PLAN

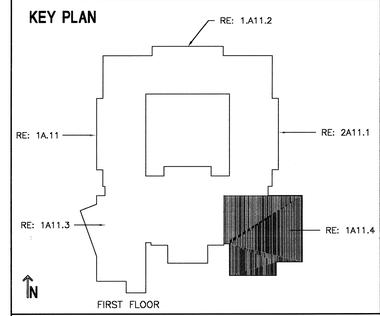

USE OF ARCHITECT'S DRAWINGS, SPECIFICATIONS AND OTHER DOCUMENTS

THE DRAWINGS, SPECIFICATIONS AND OTHER DOCUMENTS PREPARED BY THE ARCHITECT FOR THIS PROJECT ARE INSTRUMENTS OF THE ARCHITECT'S SERVICE FOR USE SOLELY WITH RESPECT TO THIS PROJECT AND, UNLESS OTHERWISE PROVIDED, THE ARCHITECT SHALL BE DEEMED THE AUTHOR OF THESE DOCUMENTS AND SHALL RETAIN ALL COMMON LAW, STATUTORY AND OTHER RESERVED RIGHTS, INCLUDING REPRODUCIBLE COPIES, OF THE ARCHITECT'S DRAWINGS, SPECIFICATIONS AND OTHER DOCUMENTS FOR INFORMATION AND REFERENCE IN CONNECTION WITH THE OWNER'S USE AND OCCUPANCY OF THE PROJECT. THE ARCHITECT'S DRAWINGS, SPECIFICATIONS OR OTHER DOCUMENTS SHALL NOT BE USED BY THE OWNER OR OTHERS ON OTHER PROJECTS, FOR ADDITIONS TO THIS PROJECT OR FOR COMPLETION OF THIS PROJECT BY OTHERS, UNLESS THE ARCHITECT IS ADJUDGED TO BE IN DEFAULT UNDER THIS AGREEMENT, EXCEPT BY AGREEMENT IN WRITING AND WITH APPROPRIATE COMPENSATION TO THE ARCHITECT.

NO.	DATE	REVISION/SUBMISSION
1	11/12/04	FIRE MARSHAL AND C.P. REVISIONS

McKINLEY MIDDLE MAGNET SCHOOL

1550 EDDIE ROBINSON SR. DRIVE
BATON ROUGE, LOUISIANA 70802

Robert M. Coleman & Partners Architects A.I.A.

3377 North Boulevard
Baton Rouge, Louisiana
70806
U.S.A.

tel 225.387.4414
fax 225.387.4693

KEYNOTES

07719.A1	PREFINISHED METAL SOFFIT PANEL
NOTE-1.5	STEEL BEAM RE: STRUCTURAL

PARTIAL REFLECTED CEILING PLAN FIRST FLOOR

PROJECT NO. 03048	SHEET NO..
DRAWN BY BH	A11.4
CHECKED BY JS	
DATE October 15, 2004	____ OF ____

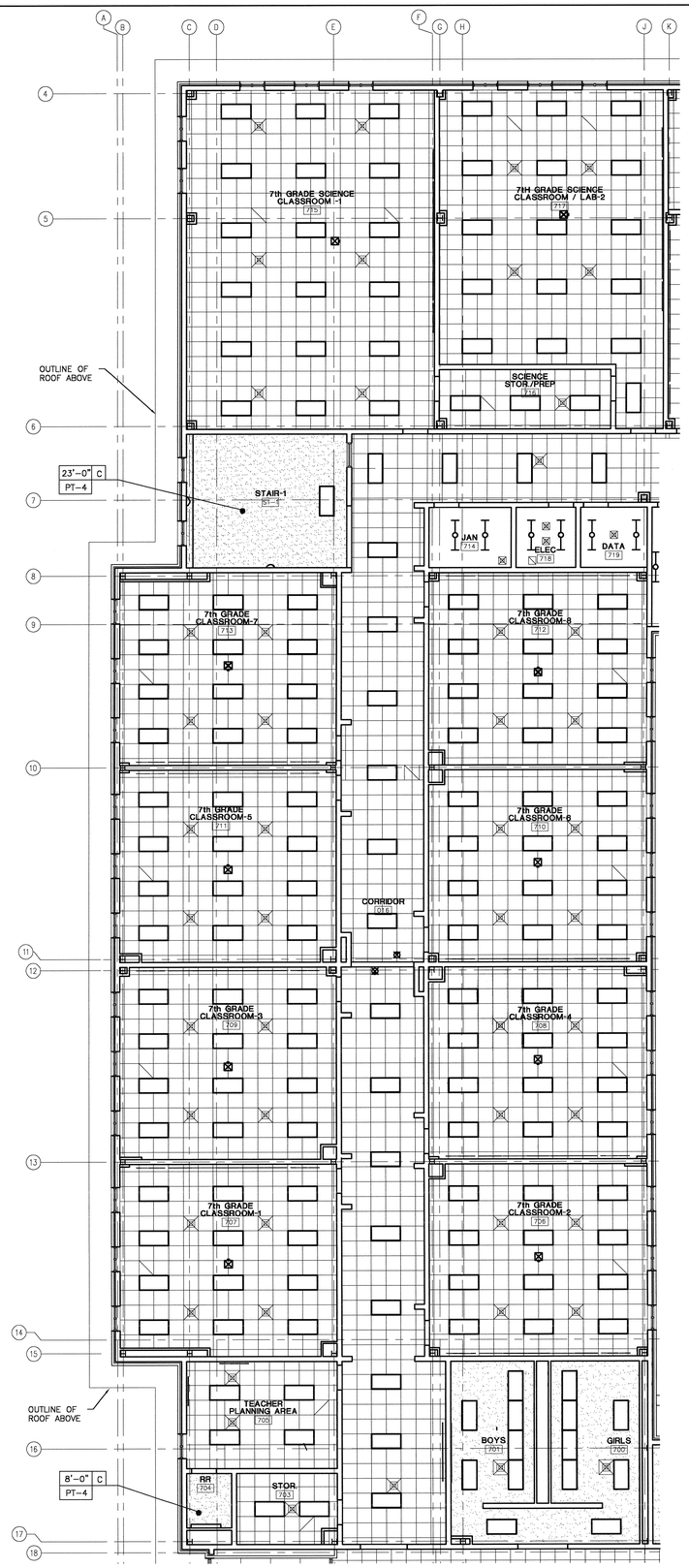

REFER TO SHEET 1A11.2 FOR THIS AREA

REFER TO SHEET 2A11.2 FOR THIS AREA

N

PROJECT

1 PARTIAL FLOOR PLAN

SCALE: 1/8" = 1'-0"

0 4' 8' 16'

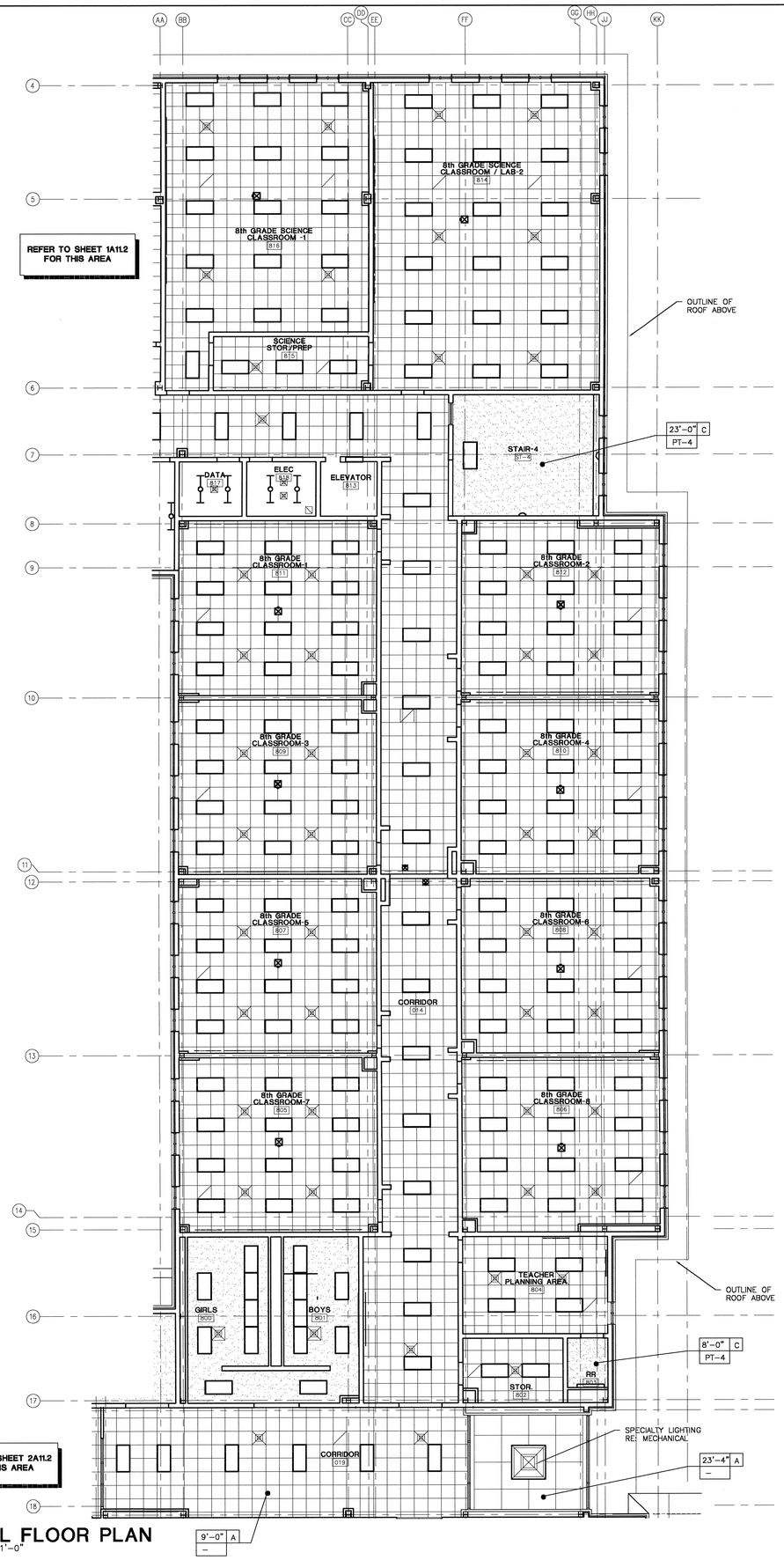

REFER TO SHEET 1A11.2 FOR THIS AREA

REFER TO SHEET 2A11.2 FOR THIS AREA

N

PROJECT

2 PARTIAL FLOOR PLAN

SCALE: 1/8" = 1'-0"

CEILING TYPES

A		2 x 2 SUSPENDED ACOUSTICAL TILE CEILING RE: SPECIFICATION SECTION 09511 RE: FINISH SCHEDULE FOR TYPE OF ACT
B		EXPOSED STRUCTURE
C		GYPSUM BOARD CEILING ON SUSPENSION SLOW SYSTEM RE: 09250 AND FINISH SCHEDULE

LEGEND

A 7'-8" / PAINT	CEILING TYPE; CEILING HEIGHT ABOVE FINISHED FLOOR; CEILING FINISH RE: FINISH SCHEDULE
	2x4 FLUORESCENT RE: ELECTRICAL
	WALL MOUNTED LIGHT FIXTURE RE: ELECTRICAL
	WALL MOUNTED LIGHT FIXTURE RE: ELECTRICAL
	SUSPENDED LIGHT FIXTURE RE: ELECTRICAL
	SUSPENDED LIGHT FIXTURE RE: ELECTRICAL
	COMPACT FLUORESCENT RE: ELECTRICAL
	EXIT FIXTURE RE: ELECTRICAL
	CEILING MOUNTED PROJECTOR (NIC) RE: ELECTRICAL FOR SCOPE OF WORK
	RETURN AIR GRILL RE: MECHANICAL
	SUPPLY AIR DIFFUSER RE: MECHANICAL

GENERAL NOTES

1.) CLASSROOM CEILING HEIGHT TO BE 9'-4" UNLESS OTHERWISE NOTED.

2.) CORRIDOR CEILING HEIGHT TO BE 9'-4" UNLESS OTHERWISE NOTED.

3.) REFER TO FINISH SCHEDULE FOR CEILING HEIGHTS.

KEY PLAN

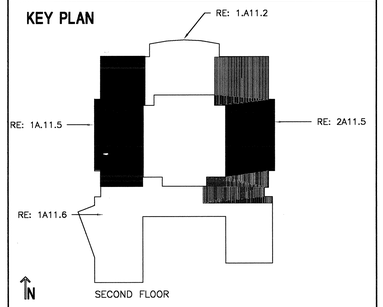

USE OF ARCHITECT'S DRAWINGS, SPECIFICATIONS AND OTHER DOCUMENTS

THE DRAWINGS, SPECIFICATIONS AND OTHER DOCUMENTS PREPARED BY THE ARCHITECT FOR THIS PROJECT ARE INSTRUMENTS OF THE ARCHITECT'S SERVICE FOR USE SOLELY WITH RESPECT TO THIS PROJECT AND, UNLESS OTHERWISE PROVIDED, THE ARCHITECT SHALL BE DEEMED THE AUTHOR OF THESE DOCUMENTS AND SHALL RETAIN ALL COMMON LAW, STATUTORY AND OTHER RESERVED RIGHTS, INCLUDING REPRODUCIBLE COPIES, OF THE ARCHITECT'S DRAWINGS, SPECIFICATIONS AND OTHER DOCUMENTS FOR INFORMATION AND REFERENCE IN CONNECTION WITH THE OWNER'S USE AND OCCUPANCY OF THE PROJECT. THE ARCHITECT'S DRAWINGS, SPECIFICATIONS OR OTHER DOCUMENTS SHALL NOT BE USED BY THE OWNER OR OTHERS ON OTHER PROJECTS, FOR ADDITIONS TO THIS PROJECT OR FOR COMPLETION OF THIS PROJECT BY OTHERS, UNLESS THE ARCHITECT IS ADJUDGED TO BE IN DEFAULT UNDER THIS AGREEMENT, EXCEPT BY AGREEMENT IN WRITING AND WITH APPROPRIATE COMPENSATION TO THE ARCHITECT.

NO.	DATE	REVISION/SUBMISSION
1	11/12/04	FIRE MARSHAL AND C.P. REVISIONS

McKINLEY MIDDLE MAGNET SCHOOL

1550 EDDIE ROBINSON SR. DRIVE
BATON ROUGE, LOUISIANA 70802

Robert M. Coleman & Partners Architects A.I.A.
3377 North Boulevard
Baton Rouge, Louisiana 70806 U.S.A.
tel 225.387.4414
fax 225.387.4693

PARTIAL REFLECTED CEILING PLAN SECOND FLOOR

PROJECT NO. 03048	SHEET NO.. A11.5
DRAWN BY BH, JM	
CHECKED BY JS	
DATE October 15, 2004	OF

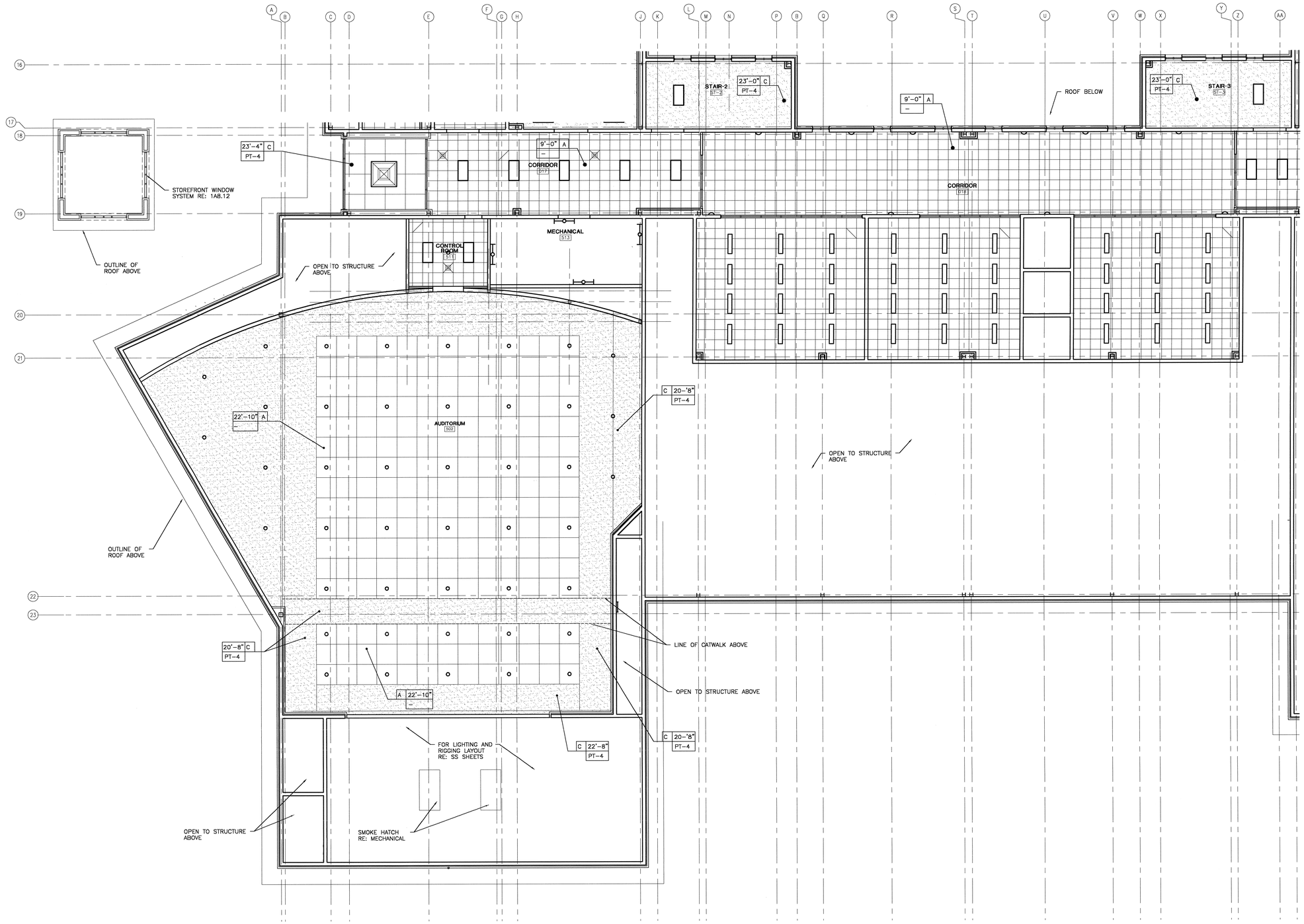

N
PROJECT

1 PARTIAL FLOOR PLAN
SCALE: 1/8" = 1'-0"

0 4' 8' 16'

CEILING TYPES

A		2 x 2 SUSPENDED ACOUSTICAL TILE CEILING RE: SPECIFICATION SECTION 09511 RE: FINISH SCHEDULE FOR TYPE OF ACT
B		EXPOSED STRUCTURE
C		GYPSUM BOARD CEILING ON SUSPENSION SLOW SYSTEM RE: 09250 AND FINISH SCHEDULE

LEGEND

- CEILING TYPE
- A 7'-8" / PAINT — CEILING HEIGHT ABOVE FINISHED FLOOR; CEILING FINISH RE: FINISH SCHEDULE
- 2x4 FLUORESCENT RE: ELECTRICAL
- WALL MOUNTED LIGHT FIXTURE RE: ELECTRICAL
- WALL MOUNTED LIGHT FIXTURE RE: ELECTRICAL
- SUSPENDED LIGHT FIXTURE RE: ELECTRICAL
- SUSPENDED LIGHT FIXTURE RE: ELECTRICAL
- COMPACT FLUORESCENT RE: ELECTRICAL
- EXIT FIXTURE RE: ELECTRICAL
- CEILING MOUNTED PROJECTOR (NIC) RE: ELECTRICAL FOR SCOPE OF WORK
- RETURN AIR GRILL RE: MECHANICAL
- SUPPLY AIR DIFFUSER RE: MECHANICAL

GENERAL NOTES

1.) CLASSROOM CEILING HEIGHT TO BE 9'-4" UNLESS OTHERWISE NOTED.

2.) CORRIDOR CEILING HEIGHT TO BE 9'-4" UNLESS OTHERWISE NOTED.

3.) REFER TO FINISH SCHEDULE FOR CEILING HEIGHTS.

KEY PLAN

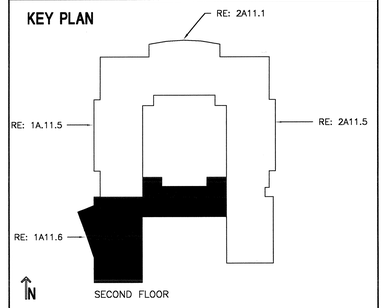

USE OF ARCHITECT'S DRAWINGS, SPECIFICATIONS AND OTHER DOCUMENTS

THE DRAWINGS, SPECIFICATIONS AND OTHER DOCUMENTS PREPARED BY THE ARCHITECT FOR THIS PROJECT ARE INSTRUMENTS OF THE ARCHITECT'S SERVICE FOR USE SOLELY WITH RESPECT TO THIS PROJECT AND, UNLESS OTHERWISE PROVIDED, THE ARCHITECT SHALL BE DEEMED THE AUTHOR OF THESE DOCUMENTS AND SHALL RETAIN ALL COMMON LAW, STATUTORY AND OTHER RESERVED RIGHTS, INCLUDING REPRODUCIBLE COPIES, OF THE ARCHITECT'S DRAWINGS, SPECIFICATIONS AND OTHER DOCUMENTS FOR INFORMATION AND REFERENCE IN CONNECTION WITH THE OWNER'S USE AND OCCUPANCY OF THE PROJECT. THE ARCHITECT'S DRAWINGS, SPECIFICATIONS OR OTHER DOCUMENTS SHALL NOT BE USED BY THE OWNER OR OTHERS ON OTHER PROJECTS, FOR ADDITIONS TO THIS PROJECT OR FOR COMPLETION OF THIS PROJECT BY OTHERS, UNLESS THE ARCHITECT IS ADJUDGED TO BE IN DEFAULT UNDER THIS AGREEMENT, EXCEPT BY AGREEMENT IN WRITING AND WITH APPROPRIATE COMPENSATION TO THE ARCHITECT.

NO.	DATE	REVISION/SUBMISSION
1	11/12/04	FIRE MARSHAL AND C.P. REVISIONS

McKINLEY MIDDLE MAGNET SCHOOL

1550 EDDIE ROBINSON SR. DRIVE
BATON ROUGE, LOUISIANA 70802

Robert M. Coleman & Partners Architects A.I.A.
3377 North Boulevard
Baton Rouge, Louisiana 70806
U.S.A.
tel 225.387.4414
fax 225.387.4693

PARTIAL REFLECTED CEILING PLAN
SECOND FLOOR

PROJECT NO. 03048	SHEET NO..
DRAWN BY BH, JM	A11.6
CHECKED BY JS	
DATE October 15, 2004	OF

ONE & SONS! REG. NO. 2211 STATE OF LOUISIANA REGISTERED ARCHITECT

FINISH SCHEDULE - FIRST FLOOR

SCALE: NTS

NUMBER	ROOM NAME	FLOOR	BASE	WALL (PROJECT DIRECTION) NORTH	SOUTH	EAST	WEST	CEILING FINISH	HEIGHT	NOTES
CORRIDORS										
001	CORRIDOR	CPT-1	RB-1	PT-1	PT-1	PT-1	PT-1	ACT-1	9'-4"	
002	CORRIDOR	CPT-1	RB-1	PT-1	PT-1	PT-1	PT-1	ACT-1	9'-4"	
003	CORRIDOR	CPT-1	RB-1	PT-1	PT-1	PT-1	PT-1	ACT-1	9'-4"	
004	CORRIDOR	VCT-1,2,3,4,5	RB-1	EPT-1	EPT-1	EPT-1	EPT-1	ACT-1	9'-4"	
005	CORRIDOR	VCT-1	RB-1	EPT-1	EPT-1	EPT-1	EPT-1	ACT-1	9'-4"	
006	CORRIDOR	VCT-1,2,3,4,5	RB-1	EPT-1	EPT-1	EPT-1	EPT-1	ACT-1	9'-4"	
007	CORRIDOR	VCT-1,2,3,4,5	RB-1	EPT-1	BRICK	EPT-1	EPT-1	ACT-1	9'-4"	
008	CORRIDOR	VCT-1,2,3,4,5	RB-1	EPT-1	EPT-1	EPT-1	EPT-1	ACT-1	9'-4"	
009	CORRIDOR	VCT-1,2	RB-1	EPT-1	EPT-1	EPT-1	EPT-1	ACT-1	9'-4"	
010	CORRIDOR	VCT-1,2,3,4,5	RB-1	EPT-1	EPT-1	EPT-1	EPT-1	ACT-1	OPEN TO ABOVE	
011	CORRIDOR	VCT-1,2,3,4,5	RB-1	EPT-1	EPT-1	EPT-1	EPT-1	ACT-1	9'-4"	
012	CORRIDOR	VCT-1,2,3,4,5	RB-1	EPT-1	EPT-1	EPT-1	EPT-1	ACT-1	9'-4"	
100 SERIES ROOMS										
100	VESTIBULE	TERRAZZO-1,2	TERRAZZO-1	BRICK/ GLASS	BRICK/ GLASS	GLASS	GLASS	ACT-3	23'-4"	N-4
101	RECEPTION AREA	CPT-1	RB-1	PT-2	PT-1	PT-1	PT-1	ACT-1	9'-4"	
102	ITINERANT OFFICE #1	CPT-1	RB-1	PT-1	PT-1	PT-1	PT-1	ACT-1	9'-4"	
103	STORAGE	CPT-1	RB-1	PT-1	PT-1	PT-1	PT-1	ACT-1	9'-4"	
104	STORAGE	CPT-1	RB-1	PT-1	PT-1	PT-1	PT-1	ACT-1	9'-4"	
105	RECORD ROOM	VCT-1	RB-1	PT-1	PT-1	PT-1	PT-1	ACT-1	9'-4"	
106	ITINERANT OFFICE #2	CPT-1	RB-1	PT-1	PT-1	PT-2	PT-1	ACT-1	9'-4"	
107	CONFERENCE ROOM	CPT-1	RB-1	PT-1	PT-1	PT-1	PT-1	ACT-1	9'-4"	
108	SECRETARY	CPT-1	RB-1	PT-1	PT-1	PT-2	PT-1	ACT-1	9'-4"	
109	WORK/ STORAGE	VCT-1	RB-1	PT-1	PT-1	PT-1	PT-1	ACT-1	9'-4"	
110	RESTROOM	EF-1	EF-1	CT-1	CT-1	CT-1	CT-1	GYP-1, PT-4	8'-0"	
111	VAULT	CPT-1	RB-1	PT-1	PT-1	PT-1	PT-1	GYP-1, PT-4	9'-4"	
112	PRINCIPAL'S OFFICE	CPT-1	RB-1	PT-1	PT-1	PT-2	PT-1	ACT-1	9'-4"	
113	WORK/ STORAGE	VCT-1	RB-1	PT-1	PT-1	PT-1	PT-1	ACT-1	9'-4"	
114	COUNSELOR'S OFFICE #1	CPT-1	RB-1	PT-1	PT-1	PT-2	PT-1	ACT-1	9'-4"	
116	ASSISTANT PRINCIPLE #1	CPT-1	RB-1	PT-1	PT-1	PT-2	PT-1	ACT-1	9'-4"	
117	STAFF DINING	VCT-1	RB-1	PT-1	PT-1	PT-1	PT-1	ACT-1	9'-4"	
118	ASSIST. PRINCIPAL #2	CPT-1	RB-1	PT-1	PT-1	PT-2	PT-1	ACT-1	9'-4"	
119	TOILET	EF-1	EF-1	CT-1	CT-1	CT-1	CT-1	GYP-1/PT-4	8'-0"	
120	COUNSELOR OFFICE #2	CPT-1	RB-1	PT-1	PT-1	PT-2	PT-1	ACT-1	9'-4"	
121	TOILET	EF-1	EF-1	CT-1	CT-1	CT-1	CT-1	GYP-1/PT-4	8'-0"	
122	CONFERENCE ROOM	CPT-1	RB-1	PT-1	PT-1	PT-2	PT-1	ACT-1	9'-4"	
123	SCHOOL NURSE	VCT-1	RB-1	PT-1	PT-1	PT-1	PT-1	ACT-1	9'-4"	
124	TOILET	EF-1	EF-1	CT-1	CT-1	CT-1	CT-1	GYP-1/PT-4	8'-0"	
125	GUIDANCE RECEPTION	CPT-1	RB-1	PT-2	PT-1	PT-1	PT-1	ACT-1	9'-4"	
126	SPEECH THERAPY	CPT-1	RB-1	PT-1	PT-1	PT-1	PT-1	ACT-1	9'-4"	
127	BOYS	EF-1	EF-1	EPT-1	EPT-1	EPT-1	EPT-1	GYP-1/PT-4	9'-4"	N-5
128	TARDY ROOM	VCT-1	RB-1	PT-1	PT-1	PT-1	PT-1	ACT-1	9'-4"	
129	GIRLS	EF-1	EF-1	EPT-1	EPT-1	EPT-1	EPT-1	GYP-1/PT-4	9'-4"	N-5
130	2D ART CLASSROOM	VCT-1	RB-1	PT-1	PT-1	PT-1	PT-1	ACT-1	9'-4"	
131	KILN	VCT-1	RB-1	PT-1	PT-1	PT-1	PT-1	ACT-1	9'-4"	
132	SHARED STORAGE	VCT-1	RB-1	PT-1	PT-1	PT-1	PT-1	ACT-1	9'-4"	
133	3D ART CLASSROOM	VCT-1	RB-1	PT-1	PT-1	PT-1	PT-1	ACT-1	9'-4"	
134	ELEVATOR	--	--	--	--	--	--	--	--	N-8
135	ELEVATOR MECHANICAL	S. CONC.	--	PT-1	PT-1	PT-1	PT-1	--	--	
136	ELECTRICAL	S. CONC.	--	PT-1	PT-1	PT-1	PT-1	--	--	
200 SERIES ROOMS										
200	SHARED STORAGE	VCT-1	RB-1	PT-1	PT-1	PT-1	PT-1	ACT-1	9'-4"	
201	CUSTODIAL STORAGE	VCT-1	RB-1	EPT-1	EPT-1	EPT-1	EPT-1	ACT-1	9'-4"	
202	MECHANICAL	S. CONC.	--	--	--	--	--	--	--	N-6
203	DATA	VCT-1	RB-1	PT-1	PT-1	PT-1	PT-1	--	--	
204	CUSTODIAL EQUIPMENT	VCT-1	RB-1	EPT-1	EPT-1	EPT-1	EPT-1	ACT-1	9'-4"	
205	RESTROOM	EF-1	EF-1	EPT-1	EPT-1	EPT-1	EPT-1	ACT-1	8'-0"	
206	CUSTODIAL OFFICE	VCT-1	RB-1	EPT-1	EPT-1	EPT-1	EPT-1	ACT-1	9'-4"	
207	SPRINKLER	S. CONC.	--	---	---	---	---	---	---	
208	RECEIVING STORAGE	VCT-1	RB-1	EPT-1	EPT-1	EPT-1	EPT-1	ACT-1	9'-4"	
209	DRY STORAGE	QT-1	QT-2	EPT-1	EPT-1	EPT-1	EPT-1	ACT-2	9'-4"	
210	CHEMICAL/ LAUNDRY	QT-1	QT-2	EPT-1	EPT-1	EPT-1	EPT-1	ACT-2	9'-4"	
211	COOLER	QT-1	--	--	--	--	--	--	--	N-7
212	LOCKER ROOM	QT-1	QT-2	EPT-1	EPT-1	EPT-1	EPT-1	ACT-2	9'-4"	
213	TOILET	EF-1	EF-1	EPT-1	EPT-1	EPT-1	EPT-1	ACT-2	8'-0"	
214	OFFICE	QT-1	QT-2	EPT-1	EPT-1	EPT-1	EPT-1	ACT-2	9'-4"	
215	TOILET	EF-1	EF-1	EPT-1	EPT-1	EPT-1	EPT-1	ACT-2	8'-0"	
216	SERVING	QT-1	QT-2	EPT-1	EPT-1	EPT-1	EPT-1	ACT-2	9'-4"	
217	KITCHEN	QT-1	QT-2	EPT-1	EPT-1	EPT-1	EPT-1	ACT-2	9'-4"	
218	STUDENT DINING	VCT-1,2,3,4,5	RB-1	EPT-2	EPT-1	EPT-1	EPT-1	ACT-1	VARIES RE: 1A11.2	
219	MECHANICAL	S. CONC.	--	--	--	--	--	--	--	N-6
300 SERIES ROOMS										
300	GYMNASIUM	WD-1	WD-1	EPT-1	EPT-1	EPT-1	EPT-1	PT-4	--	N-9
301	PE STORAGE	VCT-1	RB-1	PT-1	PT-1	PT-1	PT-1	GYP-1/PT-4	18'-6"	
302	PE/ HEALTH CLASSROOM	VCT-1	RB-1	PT-1	PT-1	PT-1	PT-1	ACT-1	9'-4"	
303	BOYS PE LOCKERS	EF-1	EF-1	EPT-1	EPT-1	EPT-1	EPT-1	GYP-1/PT-4	9'-4"	
304	BOY ATHLETIC LOCKERS	EF-1	EF-1	EPT-1	EPT-1	EPT-1	EPT-1	GYP-1/PT-4	9'-4"	
305	BOYS	EF-1	EF-1	EPT-1	EPT-1	EPT-1	EPT-1	GYP-1/PT-4	9'-4"	
306	PE/ COACHES' OFFICE	VCT-1	RB-1	PT-1	PT-1	PT-1	PT-1	ACT-1	9'-4"	
307	PE/ COACHES' OFFICE	VCT-1	RB-1	PT-1	PT-1	PT-1	PT-1	ACT-1	9'-4"	
308	GIRLS	EF-1	EF-1	EPT-1	EPT-1	EPT-1	EPT-1	GYP-1/PT-4	9'-4"	
309	GIRLS ATHLETICS LOCKERS	EF-1	EF-1	EPT-1	EPT-1	EPT-1	EPT-1	GYP-1/PT-4	9'-4"	
310	GIRLS PE LOCKERS	EF-1	EF-1	EPT-1	EPT-1	EPT-1	EPT-1	GYP-1/PT-4	9'-4"	
311	ENTRY	VCT-1	RB-1	EPT-1	EPT-1	EPT-1	EPT-1	ACT-1	9'-4"	
312	CONCESSION	VCT-1	RB-1	EPT-1	EPT-1	EPT-1	EPT-1	ACT-1	9'-4"	
313	MECHANICAL	S. CONC.	--	--	--	--	--	GYP-1/PT-4	18'-6"	
314	ATHLETIC STORAGE	VCT-1	RB-1	PT-1	PT-1	PT-1	PT-1	GYP-1/PT-4	9'-4"	
315	LAUNDRY	VCT-1	RB-1	PT-1	PT-1	PT-1	PT-1	GYP-1/PT-4	9'-4"	
316	BREC AREA STORAGE	VCT-1	RB-1	PT-1	PT-1	PT-1	PT-1	GYP-1/PT-4	9'-4"	
317	BREC OFFICE	VCT-1	RB-1	PT-1	PT-1	PT-1	PT-1	ACT-1	9'-4"	
318	VESTIBULE	EF-1	EF-1	EPT-1	EPT-1	EPT-1	EPT-1	ACT-1	9'-4"	
319	VESTIBULE	EF-1	EF-1	EPT-1	EPT-1	EPT-1	EPT-1	ACT-1	9'-4"	
400 SERIES ROOMS										
400	DANCE STUDIO	WD-2	WD-3	PT-1	PT-1	PT-1	PT-1	ACT-4	23'-4"	
401	PIANO/ STRINGS CLASSROOM	CPT-1	RB-1	PT-1	PT-1	PT-1	PT-1	ACT-4	23'-4"	
402	STORAGE	VCT-1	RB-1	PT-1	PT-1	PT-1	PT-1	ACT-1	9'-4"	
403	CHORAL PRACTICE	VCT-1	RB-1	PT-1	PT-1	PT-1	PT-1	ACT-4	9'-4"	
404	SOUND BOOTH	CPT-1	RB-1	PT-1	PT-1	PT-1	PT-1	ACT-4	9'-4"	
405	CHORAL CLASSROOM	CPT-1	RB-1	PT-1	PT-1	PT-1	PT-1	ACT-4	23'-4"	
406	SHARED UNIFORM STORAGE	VCT-1	RB-1	PT-1	PT-1	PT-1	PT-1	ACT-1	9'-4"	
407	BAND CLASSROOM	CPT-1	RB-1	PT-1	PT-1	PT-1	PT-1	ACT-4	16'-0"	
408	PRACTICE ROOM	CPT-1	RB-1	PT-1	PT-1	PT-1	PT-1	ACT-4	9'-4"	
409	STORAGE	VCT-1	RB-1	PT-1	PT-1	PT-1	PT-1	ACT-1	9'-4"	
410	INSTRUMENT STORAGE	VCT-1	RB-1	PT-1	PT-1	PT-1	PT-1	ACT-1	9'-4"	
411	SHARED OFFICE	VCT-1	RB-1	PT-1	PT-1	PT-1	PT-1	ACT-1	9'-4"	
412	SHARED LIBRARY	VCT-1	RB-1	PT-1	PT-1	PT-1	PT-1	ACT-1	9'-4"	
413	DRAMA CLASSROOM	VCT-1	RB-1	PT-1	PT-1	PT-1	PT-1	ACT-1	16'-0"	
414	TEACHER PLANNING CENTER	VCT-1	RB-1	PT-1	PT-1	PT-1	PT-1	ACT-1	9'-4"	
415	DRESSING AREA	VCT-1	RB-1	PT-1	PT-1	PT-1	PT-1	ACT-1	9'-4"	
416	DRESSING AREA	VCT-1	RB-1	PT-1	PT-1	PT-1	PT-1	ACT-1	9'-4"	
417	TOILET	EF-1	EF-1	EPT-1	EPT-1	EPT-1	EPT-1	ACT-1	8'-0"	
419	SHARED TEACHING AREA	VCT-1	RB-1	PT-1	PT-1	PT-1	PT-1	ACT-1	9'-4"	
420	PHOTOGRAPHY/ GRAPHIC ARTS	VCT-1	RB-1	PT-1	PT-1	PT-1	PT-1	ACT-1	9'-4"	
421	BOILER ROOM	S. CONC.	--	--	--	--	--	GYP-1/PT-4	14'-0"	N-6
422	MECHANICAL ROOM	S. CONC.	--	--	--	--	--	GYP-1/PT-4	14'-0"	N-6
423	ELECTRICAL	S. CONC.	--	--	--	--	--	GYP-1/PT-4	14'-0"	
500 SERIES ROOMS										
500	VESTIBULE	CPT-2	WD-3	PT-1	BRICK	PT-1	PT-1	GYP-1/PT-4	9'-4"	
501	CONCESSION	VCT-1	RB-1	EPT-1	EPT-1	EPT-1	EPT-1	ACT-2	9'-4"	
502	AUDITORIUM	CPT-2	WD-3	PT-1	PT-1	PT-1	PT-1	ACT-3	VARIES-RE:1A11.6	DO NOT PAINT BRICK
503	STAGE	WD-2	WD-3	PT-5	PT-5	PT-5	PT-5	EXPOSED STRUCTURE PT-5	VARIES	
504	COSTUME SHOP	VCT-1	RB-1	PT-1	PT-1	PT-1	PT-1	ACT-1	9'-4"	
505	PROP STORAGE	VCT-1	RB-1	PT-1	PT-1	PT-1	PT-1	ACT-1	9'-4"	
506	SCENE SHOP	S. CONC.	--	PT-1	PT-1	PT-1	PT-1	ACT-1	13'-0"	
511	CONTROL ROOM	CPT-2	RB-1	PT-5	PT-5	PT-5	PT-5	ACT-4	9'-4"	
513	MECHANICAL ROOM	S. CONC.	--	--	--	--	--	EXPOSED	13'-4"	N-6

FINISH SCHEDULE - FIRST FLOOR (CONT.)

SCALE: NTS

NUMBER	ROOM NAME	FLOOR	BASE	WALL (PROJECT DIRECTION) NORTH	SOUTH	EAST	WEST	CEILING FINISH	HEIGHT	NOTES
600 SERIES ROOMS										
600	VESTIBULE	VCT-1	RB-1	BRICK	BRICK	PT-1	GLASS	ACT-3	23'-4"	
601	BOYS	EF-1	EF-1	EPT-1	EPT-1	EPT-1	EPT-1	GYP-1/PT-4	9'-4"	N-5
602	GIRLS	EF-1	EF-1	EPT-1	EPT-1	EPT-1	EPT-1	GYP-1/PT-4	9'-4"	N-5
603	STORAGE	VCT-1	RB-1	PT-1	PT-1	PT-1	PT-1	ACT-1	9'-4"	
604	REST ROOM	EF-1	EF-1	EPT-1	EPT-1	EPT-1	EPT-1	GYP-1/PT-4	8'-0"	
605	TEACHER PLANNING AREA	VCT-1	RB-1	PT-1	PT-1	PT-1	PT-1	ACT-1	9'-4"	
607	6TH GRADE CLASSROOM 1	VCT-1	RB-1	PT-1	PT-1	PT-1	PT-1	ACT-1	9'-4"	
608	6TH GRADE CLASSROOM 2	VCT-1	RB-1	PT-1	PT-1	PT-1	PT-1	ACT-1	9'-4"	
609	6TH GRADE CLASSROOM 3	VCT-1	RB-1	PT-1	PT-1	PT-1	PT-1	ACT-1	9'-4"	
610	6TH GRADE CLASSROOM 4	VCT-1	RB-1	PT-1	PT-1	PT-1	PT-1	ACT-1	9'-4"	
611	6TH GRADE CLASSROOM 5	VCT-1	RB-1	PT-1	PT-1	PT-1	PT-1	ACT-1	9'-4"	
612	6TH GRADE CLASSROOM 6	VCT-1	RB-1	PT-1	PT-1	PT-1	PT-1	ACT-1	9'-4"	
613	6TH GRADE CLASSROOM 7	VCT-1	RB-1	PT-1	PT-1	PT-1	PT-1	ACT-1	9'-4"	
614	6TH GRADE CLASSROOM 8	VCT-1	RB-1	PT-1	PT-1	PT-1	PT-1	ACT-1	9'-4"	
616	JANITOR	S. CONC.	--	EPT-1	EPT-1	EPT-1	EPT-1	GYP-1/PT-4	9'-4"	
617	6TH GRADE SCIENCE/ LAB 1	VCT-1	RB-1	PT-1	PT-1	PT-1	PT-1	ACT-1	9'-4"	
618	SCIENCE STORAGE/ PREP.	VCT-1	RB-1	PT-1	PT-1	PT-1	PT-1	ACT-1	9'-4"	
619	6TH GRADE SCIENCE/ LAB 2	VCT-1	RB-1	PT-1	PT-1	PT-1	PT-1	ACT-1	9'-4"	
620	ELECTRICAL	S. CONC.	--	PT-1	PT-1	PT-1	PT-1	EXPOSED STRUC.	14'-0"	
621	DATA	VCT-1	RB-1	PT-1	PT-1	PT-1	PT-1	EXPOSED STRUC.	14'-0"	

FINISH SCHEDULE - SECOND FLOOR

SCALE: NTS

NUMBER	ROOM NAME	FLOOR	BASE	WALL (PROJECT DIRECTION) NORTH	SOUTH	EAST	WEST	CEILING FINISH	HEIGHT	NOTES
CORRIDORS										
014	CORRIDOR	VCT-1,2,3,4,5	RB-1	EPT-1	EPT-1	EPT-1	EPT-1	ACT-1	9'-4"	
015	CORRIDOR	VCT-1,2,3,4,5	RB-1	EPT-1	EPT-1	EPT-1	EPT-1	ACT-1	9'-4"	
016	CORRIDOR	VCT-1,2,3,4,5	RB-1	EPT-1	EPT-1	EPT-1	EPT-1	ACT-1	9'-4"	
017	CORRIDOR	VCT-1,2,3,4,5	RB-1	EPT-1	EPT-1	EPT-1	EPT-1	ACT-1	9'-0"	
018	CORRIDOR	VCT-1,2,3,4,5	RB-1	EPT-1	EPT-1	EPT-1	EPT-1	ACT-1	9'-0"	
019	CORRIDOR	VCT-1,2,3,4,5	RB-1	EPT-1	EPT-1	EPT-1	EPT-1	ACT-1	9'-0"	
700 SERIES ROOMS										
700	GIRLS	EF-1	EF-1	EPT-1	EPT-1	EPT-1	EPT-1	GYP-1/PT-4	9'-4"	N-5
701	BOYS	EF-1	EF-1	EPT-1	EPT-1	EPT-1	EPT-1	GYP-1/PT-4	9'-4"	N-5
703	STORAGE	VCT-1	RB-1	PT-1	PT-1	PT-1	PT-1	ACT-1	9'-4"	
704	REST ROOM	EF-1	EF-1	CT-1	CT-1	CT-1	CT-1	GYP-1/PT-4	8'-0"	
705	TEACHER PLANNING AREA	VCT-1	RB-1	PT-1	PT-1	PT-1	PT-1	ACT-1	9'-4"	
706	7TH GRADE CLASSROOM 2	VCT-1	RB-1	PT-1	PT-1	PT-1	PT-1	ACT-1	9'-4"	
707	7TH GRADE CLASSROOM 1	VCT-1	RB-1	PT-1	PT-1	PT-1	PT-1	ACT-1	9'-4"	
708	7TH GRADE CLASSROOM 4	VCT-1	RB-1	PT-1	PT-1	PT-1	PT-1	ACT-1	9'-4"	
709	7TH GRADE CLASSROOM 3	VCT-1	RB-1	PT-1	PT-1	PT-1	PT-1	ACT-1	9'-4"	
710	7TH GRADE CLASSROOM 6	VCT-1	RB-1	PT-1	PT-1	PT-1	PT-1	ACT-1	9'-4"	
711	7TH GRADE CLASSROOM 5	VCT-1	RB-1	PT-1	PT-1	PT-1	PT-1	ACT-1	9'-4"	
712	7TH GRADE CLASSROOM 8	VCT-1	RB-1	PT-1	PT-1	PT-1	PT-1	ACT-1	9'-4"	
713	7TH GRADE CLASSROOM 7	VCT-1	RB-1	PT-1	PT-1	PT-1	PT-1	ACT-1	9'-4"	
714	JANITOR	S. CONC.	--	EPT-1	EPT-1	EPT-1	EPT-1	ACT-1	9'-4"	
715	7TH GRADE SCIENCE/ LAB 1	VCT-1	RB-1	PT-1	PT-1	PT-1	PT-1	ACT-1	9'-4"	
716	SCIENCE STORAGE/ PREP.	VCT-1	RB-1	PT-1	PT-1	PT-1	PT-1	ACT-1	9'-4"	
717	7TH GRADE SCIENCE/ LAB 2	VCT-1	RB-1	PT-1	PT-1	PT-1	PT-1	ACT-1	9'-4"	
718	ELECTRICAL	S. CONC.	--	PT-1	PT-1	PT-1	PT-1	---	13'-4"	
719	DATA	VCT-1	RB-1	PT-1	PT-1	PT-1	PT-1	---	13'-4"	
720	MECHANICAL	S. CONC.	--	--	--	--	--	---	13'-4"	N-6
800 SERIES ROOMS										
800	GIRLS	EF-1	EF-1	EPT-1	EPT-1	EPT-1	EPT-1	GYP-1/PT-4	9'-4"	N-5
801	BOYS	EF-1	EF-1	EPT-1	EPT-1	EPT-1	EPT-1	GYP-1/PT-4	9'-4"	N-5
802	STORAGE	VCT-1	RB-1	PT-1	PT-1	PT-1	PT-1	ACT-1	9'-4"	
803	REST ROOM	EF-1	EF-1	EPT-1	EPT-1	EPT-1	EPT-1	GYP-1/PT-4	8'-0"	
804	TEACHER PLANNING AREA	VCT-1	RB-1	PT-1	PT-1	PT-1	PT-1	ACT-1	9'-4"	
805	8TH GRADE CLASSROOM 7	VCT-1	RB-1	PT-1	PT-1	PT-1	PT-1	ACT-1	9'-4"	
806	8TH GRADE CLASSROOM 8	VCT-1	RB-1	PT-1	PT-1	PT-1	PT-1	ACT-1	9'-4"	
807	8TH GRADE CLASSROOM 5	VCT-1	RB-1	PT-1	PT-1	PT-1	PT-1	ACT-1	9'-4"	
808	8TH GRADE CLASSROOM 6	VCT-1	RB-1	PT-1	PT-1	PT-1	PT-1	ACT-1	9'-4"	
809	8TH GRADE CLASSROOM 3	VCT-1	RB-1	PT-1	PT-1	PT-1	PT-1	ACT-1	9'-4"	
810	8TH GRADE CLASSROOM 4	VCT-1	RB-1	PT-1	PT-1	PT-1	PT-1	ACT-1	9'-4"	
811	8TH GRADE CLASSROOM 1	VCT-1	RB-1	PT-1	PT-1	PT-1	PT-1	ACT-1	9'-4"	
812	8TH GRADE CLASSROOM 2	VCT-1	RB-1	PT-1	PT-1	PT-1	PT-1	ACT-1	9'-4"	
813	ELEVATOR	VCT-1	--	--	--	--	--	--	--	
814	8TH GRADE SCIENCE/ LAB 2	VCT-1	RB-1	PT-1	PT-1	PT-1	PT-1	ACT-1	9'-4"	
815	SCIENCE STORAGE/ PREP.	VCT-1	RB-1	PT-1	PT-1	PT-1	PT-1	ACT-1	9'-4"	
816	8TH GRADE SCIENCE/ LAB 1	VCT-1	RB-1	PT-1	PT-1	PT-1	PT-1	ACT-1	9'-4"	
817	DATA	VCT-1	RB-1	PT-1	PT-1	PT-1	PT-1	--	13'-4"	
818	ELECTRICAL	S. CONC.	--	PT-1	PT-1	PT-1	PT-1	--	13'-4"	
819	MECHANICAL	S. CONC.	--	--	--	--	--	--	13'-4"	N-6
900 SERIES ROOMS										
900	EDUCATION COMPUTER LAB	VCT-1	RB-1	PT-1	PT-1	PT-1	PT-1	ACT-1	9'-4"	
901	MEDIA CENTER	CPT-2	WD-3	PT-1	PT-1	PT-1	PT-1	ACT-1/GYP. PT-4	9'-4" - VARIES	
902	BOOK STORAGE	VCT-1	RB-1	PT-1	PT-1	PT-1	PT-1	ACT-1	9'-4"	
903	WORK ROOM	VCT-1	RB-1	PT-1	PT-1	PT-1	PT-1	ACT-1	9'-4"	
904	COMPUTER CLASSROOM	VCT-1	RB-1	PT-1	PT-1	PT-1	PT-1	ACT-1	9'-4"	
905	OFFICE	CPT-2	RB-1	PT-1	PT-1	PT-1	PT-1	ACT-1	9'-4"	
906	TOILET	EF-1	EF-1	CT-1	CT-1	CT-1	CT-1	GYP-1/PT-4	8'-0"	
907	MULTI MEDIA	VCT-1	RB-1	PT-1	PT-1	PT-1	PT-1	ACT-1	9'-4"	
908	SERVER ROOM	VCT-1	RB-1	PT-1	PT-1	PT-1	PT-1	ACT-1	9'-4"	
909	CONFERENCE	CPT-2	RB-1	PT-1	PT-1	PT-2	PT-1	ACT-1	9'-4"	
STAIR SERIES										
ST-1	STAIR-2	VCT-1	RB-1	EPT-1	EPT-1	EPT-1	EPT-1	GYP-1/PT-4	VARIES	N-12
ST-2	STAIR-3	VCT-1	RB-1	EPT-1	EPT-1	EPT-1	EPT-1	GYP-1/PT-4	VARIES	N-12
ST-3	STAIR-4	VCT-1	RB-1	EPT-1	EPT-1	EPT-1	EPT-1	GYP-1/PT-4	VARIES	N-12
ST-4	STAIR-5	VCT-1	RB-1	EPT-1	EPT-1	EPT-1	EPT-1	GYP-1/PT-4	VARIES	N-12

NOTES

N-1 CASEWORK TO HAVE PLASTIC LAMINATE FINISH (L-1) WITH PLASTIC LAMINATE COUNTERTOPS (L-2). (GENERAL NOTE NOT SHOWN ON FINISH SCHEDULE)

N-2 TOILET PARTITIONS/DOORS TO BE PHENOLIC (L-3). (GENERAL NOTE NOT SHOWN ON FINISH SCHEDULE)

N-3 PROVIDE RUBBER TRANSITION STRIP BETWEEN VCT & CARPET AT ALL LOCATIONS AS REQUIRED. (GENERAL NOTE NOT SHOWN ON FINISH SCHEDULE)

N-4 PAINT FURR DOWN WITH PT-1.

N-5 THE ENTRY WALL AT THE ELECTRIC WATER COOLER TO BE PAINTED EPT-2.

N-6 MECHANICAL ROOMS TO RECEIVE SOUND ATTENUATION AND INSULATION. WALLS ARE TO REMAIN UNFINISHED. RE: 07210.

N-7 QUARRY THE FLOOR ON MUD SLAB.

N-8 FINISH FLOOR OF CAB WITH VCT.

N-9 PT-7 ON EXPOSED DUCTWORK.

N-10 DOORS SHALL BE STAINED (PT-6). SAMPLE SHALL BE PROVIDED TO ARCHITECT FOR APPROVAL. (GENERAL NOTE NOT SHOWN ON FINISH SCHEDULE)

N-11 TRIM TO BE PAINTED (PT-3). (GENERAL NOTE NOT SHOWN ON FINISH SCHEDULE)

N-12 RUBBER BASE AND TREADS RE: SPECIFICATIONS 09650. COLOR TO BE SELECTED BY ARCHITECT.

VCT LEGEND

- VCT-1 (FIELD)
- VCT-2 (BORDER)
- VCT-3 (ACCENT TILE)
- VCT-4 (ACCENT TILE)
- VCT-3 (ACCENT TILE)

3 FINISH LEGEND

MARK	MANUFACTURER	MODEL #/DESCRIPTION	SIZE	REMARKS
VCT-1		VINYL COMPOSITION TILE RE: SPEC. SECT. 09650	12" X 12"	MAIN FIELD COLOR
VCT-2		VINYL COMPOSITION TILE RE: SPEC. SECT. 09650	12" X 12"	ACCENT COLOR
VCT-3		VINYL COMPOSITION TILE RE: SPEC. SECT. 09650	12" X 12"	ACCENT COLOR
VCT-4		VINYL COMPOSITION TILE RE: SPEC. SECT. 09650	12" X 12"	ACCENT COLOR
VCT-5

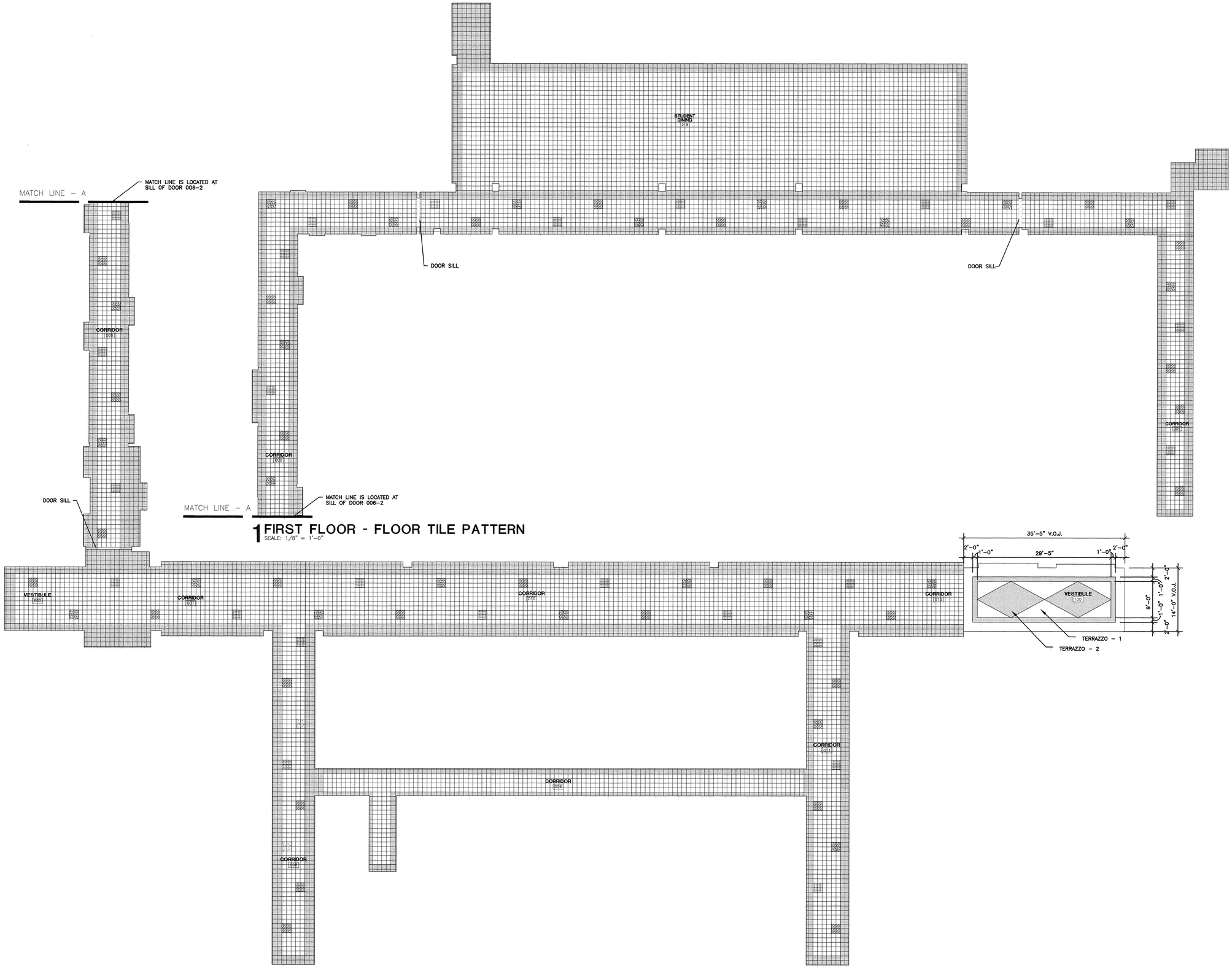

1 FIRST FLOOR - FLOOR TILE PATTERN
SCALE: 1/8" = 1'-0"

2 FIRST FLOOR - FLOOR TILE PATTERN
SCALE: 1/8" = 1'-0"

PROJECT

NOTE: CONTRACTOR TO VERIFY ALL FIELD CONDITIONS PRIOR TO LAYING OUT OF FLOOR PATTERN.

0 4' 8' 16'
SCALE: 1/8" = 1'-0"

MATERIAL KEYNOTES

LEGEND

- VCT-1
- VCT – 2
- VCT – 3
- VCT – 4
- VCT – 5
- TERRAZZO – 1
- TERRAZZO – 2

KEY PLAN

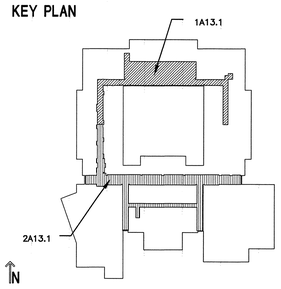

USE OF ARCHITECT'S DRAWINGS, SPECIFICATIONS AND OTHER DOCUMENTS

THE DRAWINGS, SPECIFICATIONS AND OTHER DOCUMENTS PREPARED BY THE ARCHITECT FOR THIS PROJECT ARE INSTRUMENTS OF THE ARCHITECT'S SERVICE FOR USE SOLELY WITH RESPECT TO THIS PROJECT AND, UNLESS OTHERWISE PROVIDED, THE ARCHITECT SHALL BE DEEMED THE AUTHOR OF THESE DOCUMENTS AND SHALL RETAIN ALL COMMON LAW, STATUTORY AND OTHER RESERVED RIGHTS, INCLUDING REPRODUCIBLE COPIES, OF THE ARCHITECT'S DRAWINGS, SPECIFICATIONS AND OTHER DOCUMENTS FOR INFORMATION AND REFERENCE IN CONNECTION WITH THE OWNER'S USE AND OCCUPANCY OF THE PROJECT. THE ARCHITECT'S DRAWINGS, SPECIFICATIONS OR OTHER DOCUMENTS SHALL NOT BE USED BY THE OWNER OR OTHERS ON OTHER PROJECTS, FOR ADDITIONS TO THIS PROJECT OR FOR COMPLETION OF THIS PROJECT BY OTHERS, UNLESS THE ARCHITECT IS ADJUDGED TO BE IN DEFAULT UNDER THIS AGREEMENT, EXCEPT BY AGREEMENT IN WRITING AND WITH APPROPRIATE COMPENSATION TO THE ARCHITECT.

NO.	DATE	REVISION/SUBMISSION
1	11/12/04	FIRE MARSHAL AND C.P. REVISIONS

McKINLEY MIDDLE MAGNET SCHOOL

1550 EDDIE ROBINSON SR. DRIVE
BATON ROUGE, LOUISIANA 70802

Robert M. Coleman & Partners Architects A.I.A.
3377 North Boulevard
Baton Rouge, Louisiana 70806 U.S.A.
tel 225.387.4414
fax 225.387.4693

FIRST FLOOR FLOOR TILE PATTERN

PROJECT NO. 03048	SHEET NO. A12.2
DRAWN BY	
CHECKED BY JS	
DATE October 15, 2004	OF

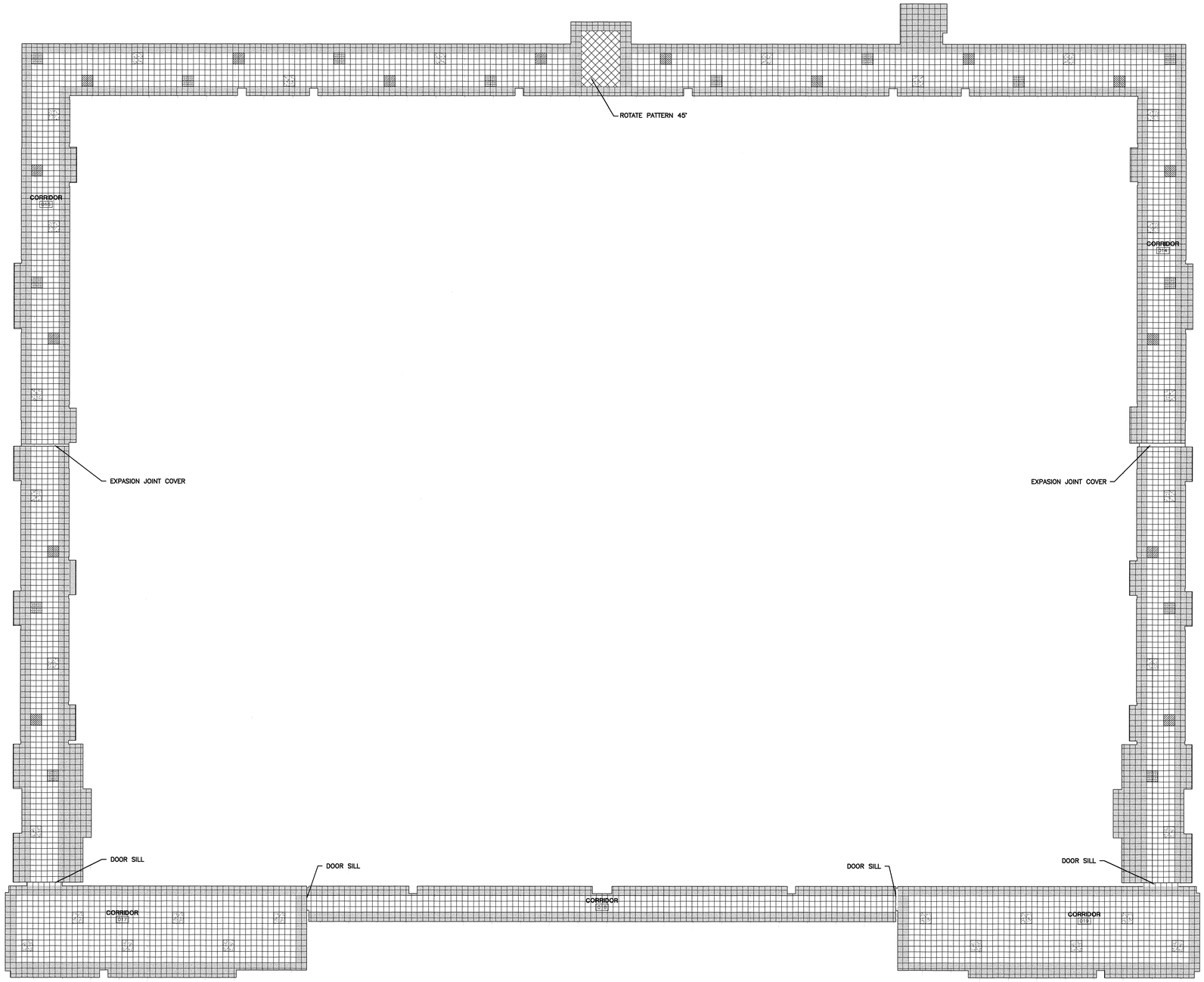

N

PROJECT

1 SECOND FLOOR - FLOOR TILE PATTERN

SCALE: 1/16" = 1'-0"

0 8' 16' 32'

NOTE: CONTRACTOR TO VERIFY ALL FIELD CONDITIONS PRIOR TO LAYING OUT OF FLOOR PATTERN.

MATERIAL KEYNOTES

LEGEND

- VCT – 1
- VCT – 2
- VCT – 3
- VCT – 4
- VCT – 5

KEY PLAN

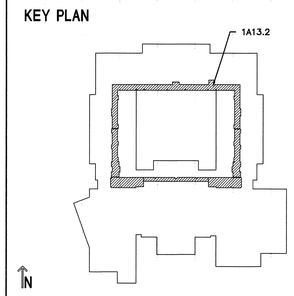

USE OF ARCHITECT'S DRAWINGS, SPECIFICATIONS AND OTHER DOCUMENTS

THE DRAWINGS, SPECIFICATIONS AND OTHER DOCUMENTS PREPARED BY THE ARCHITECT FOR THIS PROJECT ARE INSTRUMENTS OF THE ARCHITECT'S SERVICE FOR USE SOLELY WITH RESPECT TO THIS PROJECT AND, UNLESS OTHERWISE PROVIDED, THE ARCHITECT SHALL BE DEEMED THE AUTHOR OF THESE DOCUMENTS AND SHALL RETAIN ALL COMMON LAW, STATUTORY AND OTHER RESERVED RIGHTS, INCLUDING REPRODUCIBLE COPIES, OF THE ARCHITECT'S DRAWINGS, SPECIFICATIONS AND OTHER DOCUMENTS FOR INFORMATION AND REFERENCE IN CONNECTION WITH THE OWNER'S USE AND OCCUPANCY OF THE PROJECT. THE ARCHITECT'S DRAWINGS, SPECIFICATIONS OR OTHER DOCUMENTS SHALL NOT BE USED BY THE OWNER OR OTHERS ON OTHER PROJECTS, FOR ADDITIONS TO THIS PROJECT OR FOR COMPLETION OF THIS PROJECT BY OTHERS, UNLESS THE ARCHITECT IS ADJUDGED TO BE IN DEFAULT UNDER THIS AGREEMENT, EXCEPT BY AGREEMENT IN WRITING AND WITH APPROPRIATE COMPENSATION TO THE ARCHITECT.

NO.	DATE	REVISION/SUBMISSION
1	11/12/04	FIRE MARSHAL AND C.P. REVISIONS

McKINLEY MIDDLE MAGNET SCHOOL

1550 EDDIE ROBINSON SR. DRIVE
BATON ROUGE, LOUISIANA 70802

Robert M. Coleman & Partners Architects A.I.A.

3377 North Boulevard
Baton Rouge, Louisiana
70806
U.S.A.

tel 225.387.4414
fax 225.387.4693

SECOND FLOOR FLOOR TILE PATTERN

RENE H. SONNIER JR. 2011 REGISTERED STATE OF LOUISIANA ARCHITECT

PROJECT NO.	03048
DRAWN BY	CS
CHECKED BY	JS
DATE	October 15, 2004
SHEET NO..	A12.3

OF

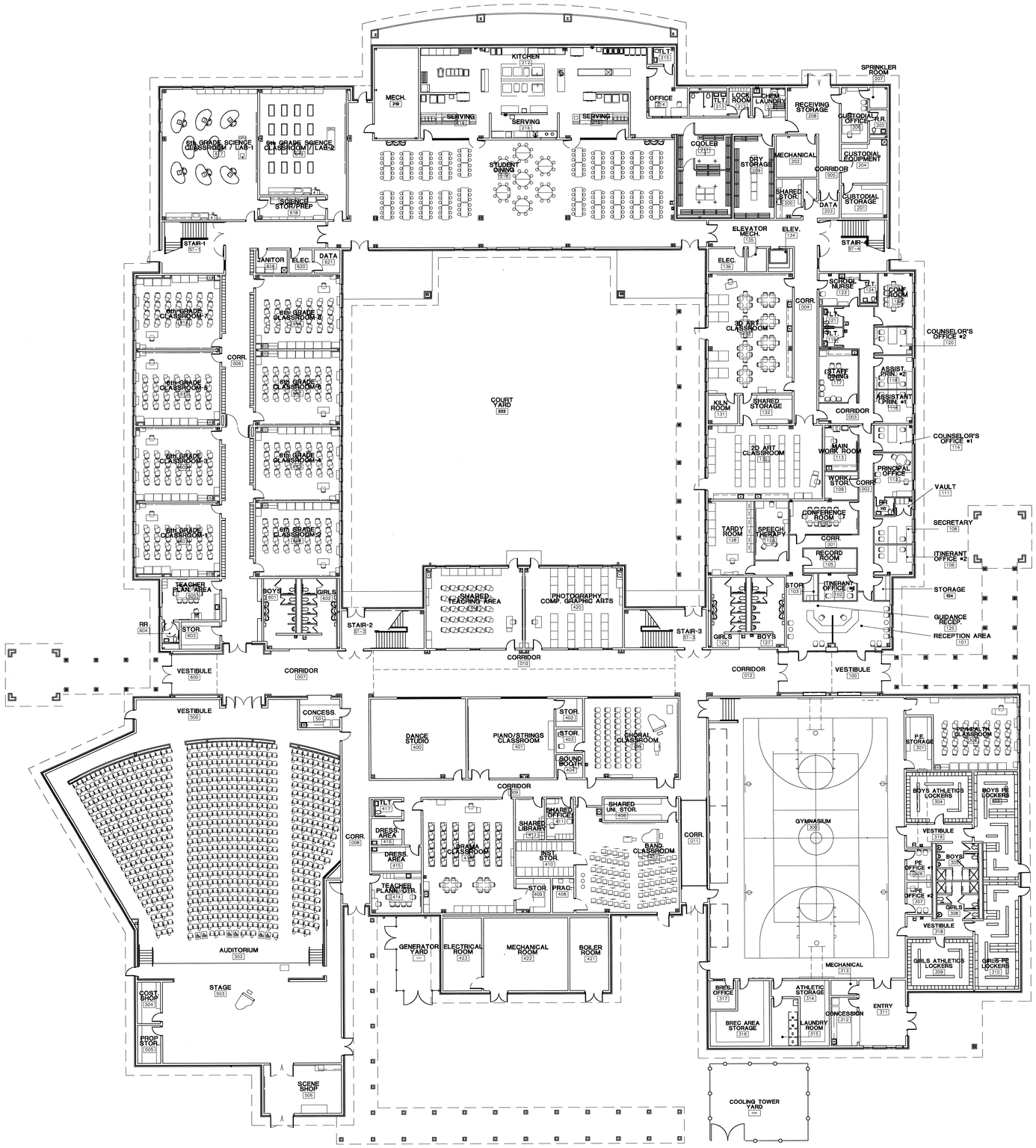

N

PROJECT

1 FIRST FLOOR FURNITURE PLAN

SCALE: 1/16" = 1'-0"

0 8' 16' 32'

MATERIAL KEYNOTES

NOTES:

1. NOT ALL FURNITURE SHOW IN FURNITURE PLAN WILL BE INCLUDED AS PART OF THE BID PACKAGE. REFER TO SPECIFICATIONS & A3 SHEET'S FOR ALL FURNITURE TO BE INCLUDED IN BID PACKAGE.
2. FURNITURE LAYOUTS ARE FOR INFORMATIONAL PURPOSES ONLY. FINAL LAYOUT WILL BE COVERED UNDER A SEPARATE CONTRACT.

KEY PLAN

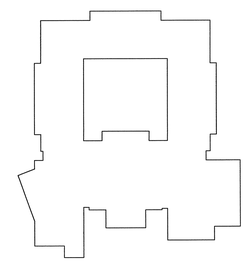

N

USE OF ARCHITECT'S DRAWINGS, SPECIFICATIONS AND OTHER DOCUMENTS

THE DRAWINGS, SPECIFICATIONS AND OTHER DOCUMENTS PREPARED BY THE ARCHITECT FOR THIS PROJECT ARE INSTRUMENTS OF THE ARCHITECT'S SERVICE FOR USE SOLELY WITH RESPECT TO THIS PROJECT AND, UNLESS OTHERWISE PROVIDED, THE ARCHITECT SHALL BE DEEMED THE AUTHOR OF THESE DOCUMENTS AND SHALL RETAIN ALL COMMON LAW, STATUTORY AND OTHER RESERVED RIGHTS, INCLUDING REPRODUCIBLE COPIES, OF THE ARCHITECT'S DRAWINGS, SPECIFICATIONS AND OTHER DOCUMENTS FOR INFORMATION AND REFERENCE IN CONNECTION WITH THE OWNER'S USE AND OCCUPANCY OF THE PROJECT. THE ARCHITECT'S DRAWINGS, SPECIFICATIONS OR OTHER DOCUMENTS SHALL NOT BE USED BY THE OWNER OR OTHERS ON OTHER PROJECTS, FOR ADDITIONS TO THIS PROJECT OR FOR COMPLETION OF THIS PROJECT BY OTHERS, UNLESS THE ARCHITECT IS ADJUDGED TO BE IN DEFAULT UNDER THIS AGREEMENT, EXCEPT BY AGREEMENT IN WRITING AND WITH APPROPRIATE COMPENSATION TO THE ARCHITECT.

NO.	DATE	REVISION/SUBMISSION
1	11/12/04	FIRE MARSHAL AND C.P. REVISIONS

McKINLEY MIDDLE MAGNET SCHOOL

1550 EDDIE ROBINSON SR. DRIVE
BATON ROUGE, LOUISIANA 70802

Robert M. Coleman & Partners Architects A.I.A.
3377 North Boulevard
Baton Rouge, Louisiana 70806 U.S.A.
tel 225.387.4414
fax 225.387.4693

FIRST FLOOR FURNITURE PLAN

PROJECT NO. 03048	SHEET NO.. A13.1
DRAWN BY CS	
CHECKED BY JS	
DATE October 15, 2004	OF

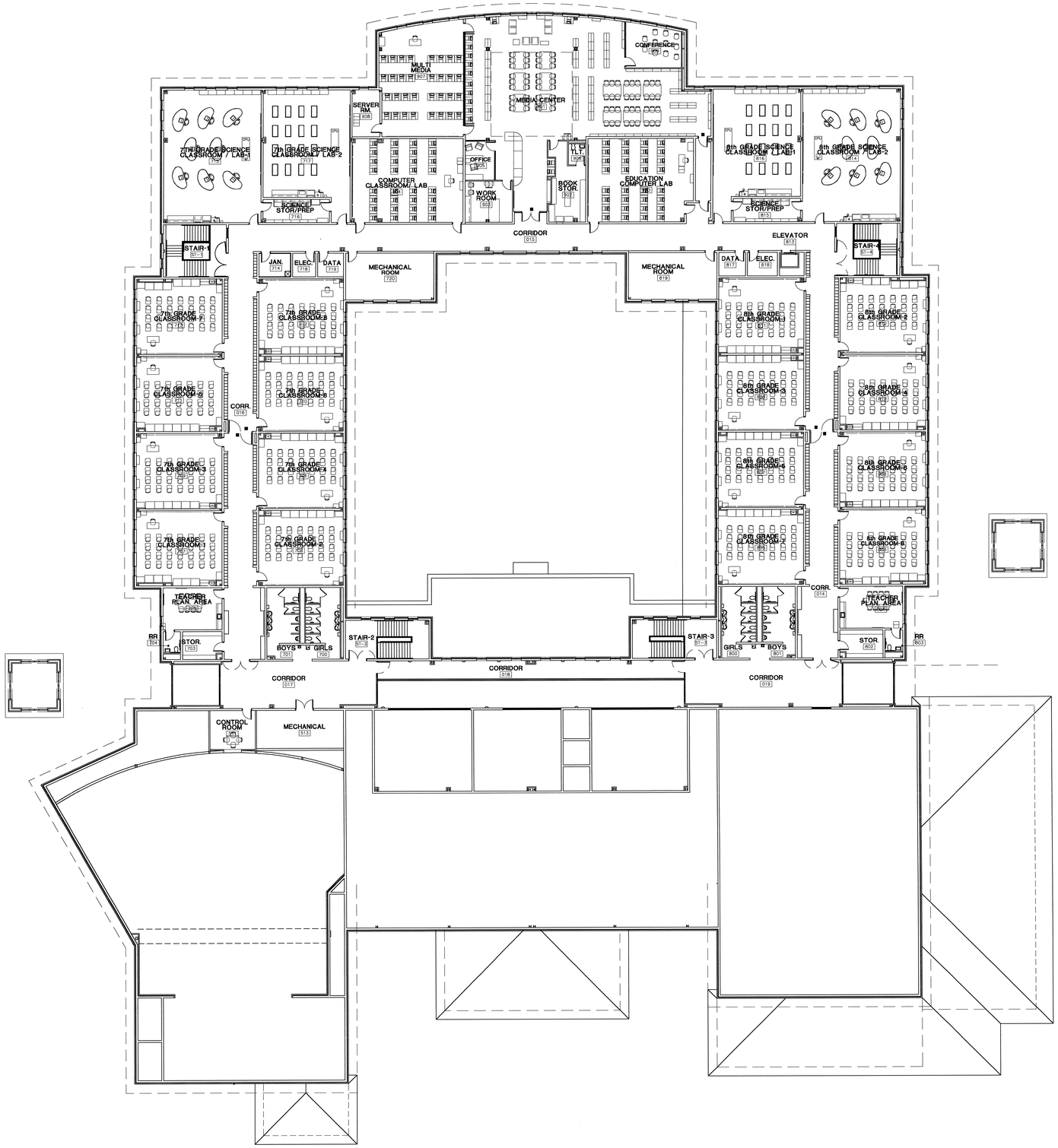

N

PROJECT

1 SECOND FLOOR PLAN

SCALE: 1/16" = 1'-0"

0 8' 16' 32'

MATERIAL KEYNOTES

NOTES:

1. NOT ALL FURNITURE SHOW IN FURNITURE PLAN WILL BE INCLUDED AS PART OF THE BID PACKAGE. REFER TO SPECIFICATIONS FOR ALL FURNITURE TO BE INCLUDED IN BID PACKAGE.
2. FURNITURE LAYOUTS ARE FOR GRAPHICAL PURPOSES ONLY. FINAL LAYOUT WILL BE COVERED UNDER A SEPARATE CONTRACT.

KEY PLAN

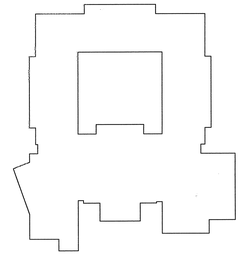

N

USE OF ARCHITECT'S DRAWINGS, SPECIFICATIONS AND OTHER DOCUMENTS

THE DRAWINGS, SPECIFICATIONS AND OTHER DOCUMENTS PREPARED BY THE ARCHITECT FOR THIS PROJECT ARE INSTRUMENTS OF THE ARCHITECT'S SERVICE FOR USE SOLELY WITH RESPECT TO THIS PROJECT AND, UNLESS OTHERWISE PROVIDED, THE ARCHITECT SHALL BE DEEMED THE AUTHOR OF THESE DOCUMENTS AND SHALL RETAIN ALL COMMON LAW, STATUTORY AND OTHER RESERVED RIGHTS, INCLUDING REPRODUCIBLE COPIES, OF THE ARCHITECT'S DRAWINGS, SPECIFICATIONS AND OTHER DOCUMENTS FOR INFORMATION AND REFERENCE IN CONNECTION WITH THE OWNER'S USE AND OCCUPANCY OF THE PROJECT. THE ARCHITECT'S DRAWINGS, SPECIFICATIONS OR OTHER DOCUMENTS SHALL NOT BE USED BY THE OWNER OR OTHERS ON OTHER PROJECTS, FOR ADDITIONS TO THIS PROJECT OR FOR COMPLETION OF THIS PROJECT BY OTHERS, UNLESS THE ARCHITECT IS ADJUDGED TO BE IN DEFAULT UNDER THIS AGREEMENT, EXCEPT BY AGREEMENT IN WRITING AND WITH APPROPRIATE COMPENSATION TO THE ARCHITECT.

NO.	DATE	REVISION/SUBMISSION
1	11/12/04	FIRE MARSHAL AND C.P. REVISIONS

McKINLEY MIDDLE MAGNET SCHOOL

1550 EDDIE ROBINSON SR. DRIVE
BATON ROUGE, LOUISIANA 70802

Robert M. Coleman & Partners Architects A.I.A.

3377 North Boulevard
Baton Rouge, Louisiana
70806
U.S.A.

tel 225.387.4414
fax 225.387.4693

SECOND FLOOR FURNITURE PLAN

PROJECT NO.	SHEET NO..
03048	A13.2
DRAWN BY CS	
CHECKED BY JS	
DATE October 15, 2004	OF